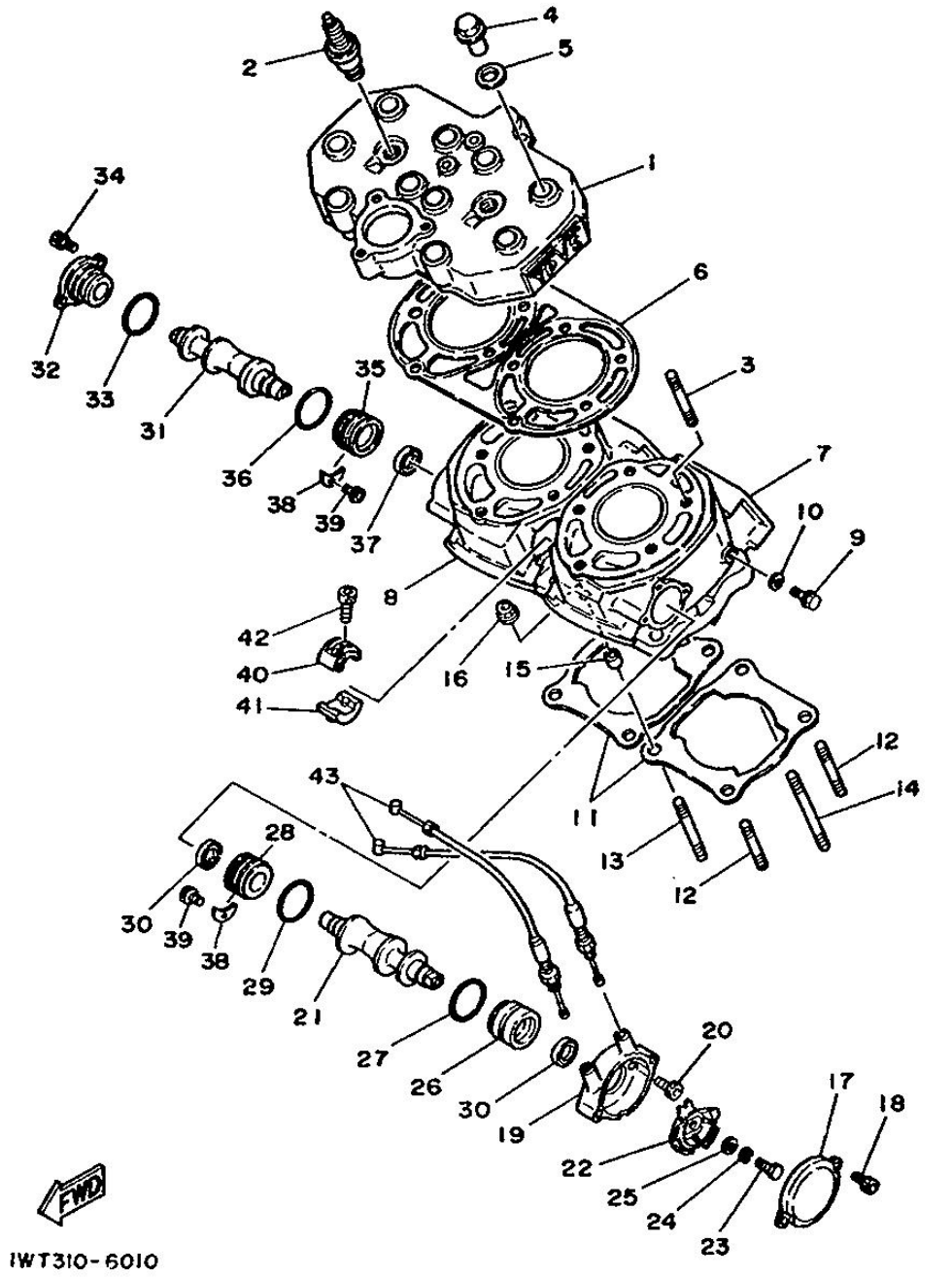

Fig. 01 CYLINDER

N° référen	Référence de la pièce	Description		Remarques
1	1UA-11111-01	HEAD, cylinder 1	1	
2	94701-00188	PLUG, spark (NGK BR9ES)	2	
3	90116-08424	BOLT, stud	10	
4	90179-08343	NUT	10	
5	90201-122A7	WASHER, plate	10	
6	31K-11181-00	GASKET, cylinder head 1	1	
7	1UA-11311-00	CYLINDER 1	1	
8	1UA-11321-00	CYLINDER 2	1	
9	95826-06010	BOLT, flange	2	
10	90430-06166	GASKET	2	
11	29L-11351-00	GASKET, cylinder	2	
12	90116-08318	BOLT, stud	4	
13	90116-08388	BOLT, stud	2	
14	90116-08064	BOLT, stud	2	
15	99510-10114	PIN, dowel	4	
16	90179-08299	NUT	8	
17	1UA-1131R-00	CAP, seal	1	
18	91316-05012	BOLT	2	
19	29L-1131M-00	COVER	1	
20	91316-05012	BOLT	2	
21	31K-1131A-00	VALVE 1	1	
22	29L-1132E-00	PULLEY 1	1	
23	97326-06018	BOLT	1	
24	92906-06100	WASHER, spring	1	
25	92906-06600	WASHER, plate	1	
26	31K-1131U-00	HOLDER 3	1	
27	93210-30640	O-RING	1	

Copyright(C) 2009 YAMAHA MOTOR CO. LTD. JAPAN All rights reserved

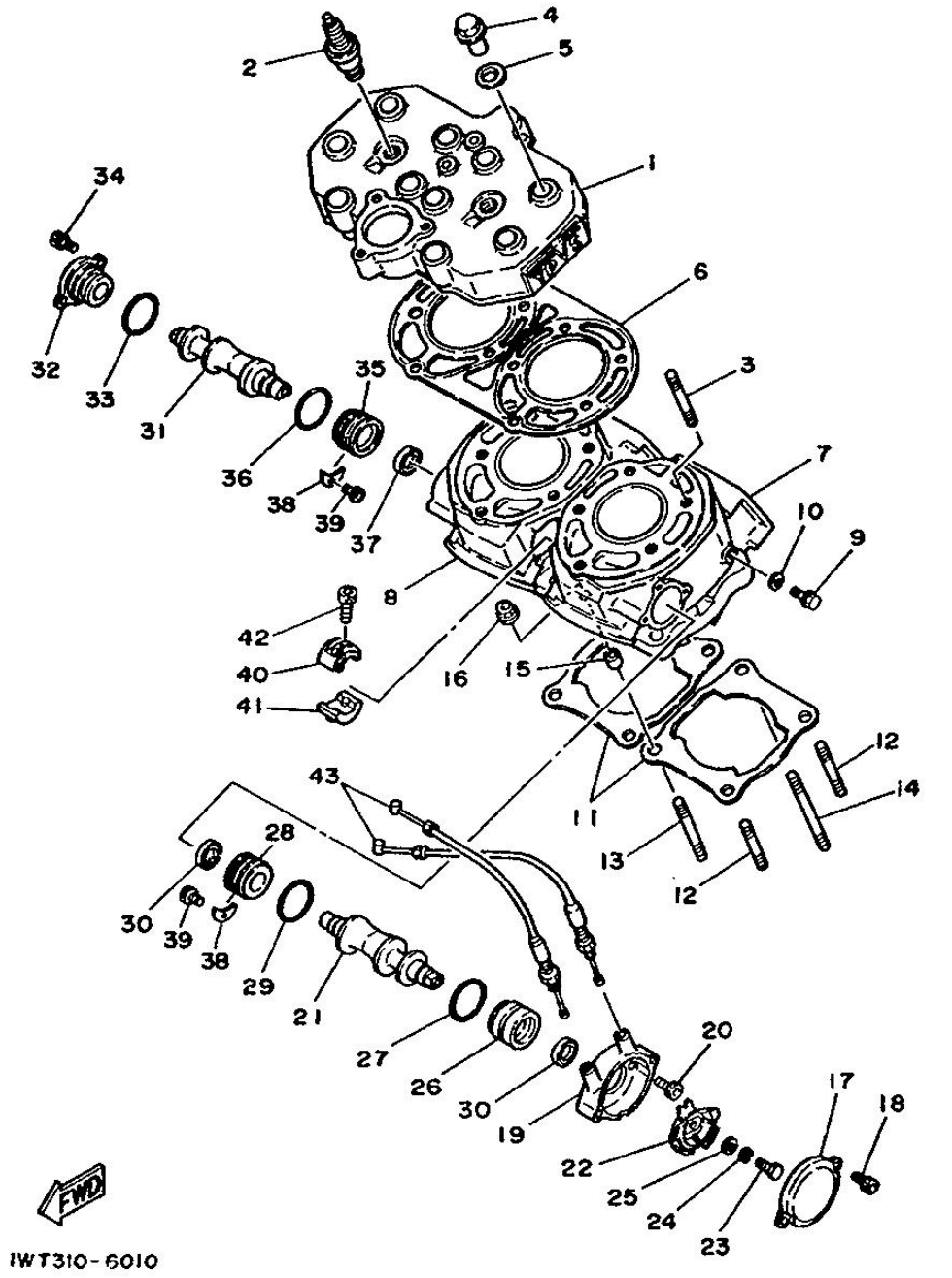

Fig. 01 CYLINDER

N° référen	Référence de la pièce	Description		Remarques
28	31K-1131F-00	HOLDER 2	1	
29	93210-30734	O-RING	1	
30	93108-23010	OIL SEAL	2	
31	31K-1132A-00	VALVE 2	1	
32	1UA-1131E-00	HOLDER 1	1	
33	93210-30640	O-RING	1	
34	91316-05012	BOLT	2	
35	31K-1131F-00	HOLDER 2	1	
36	93210-30734	O-RING	1	
37	93108-23010	OIL SEAL	1	
38	31K-11915-00	PLATE, thrust 1	2	
39	91316-05010	BOLT	2	
40	29L-1131H-00	JOINT 1	1	
41	29L-1131J-00	JOINT 2	1	
42	91316-04020	BOLT	2	
43	29L-1133E-00	CABLE, pulley 1	2	

Copyright(C) 2009 YAMAHA MOTOR CO. LTD. JAPAN All rights reserved

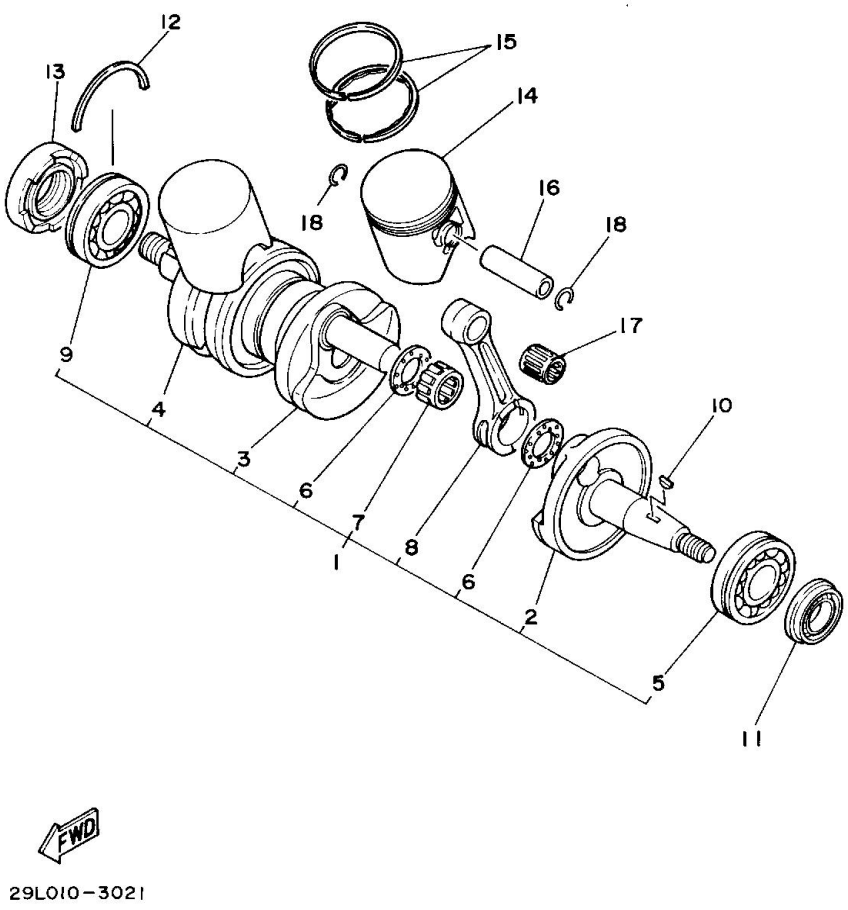

Fig. 02 CRANKSHAFT & PISTON

N° référen	Référence de la pièce	Description		Remarques
1	29L-11400-30	CRANKSHAFT ASSY	1	
2	29L-11412-00	.CRANK 1	1	
3	29L-11409-30	.CRANK SUB ASSY	1	
4	29L-11442-10	.CRANK 4	1	
5	93306-30548	.BEARING	1	
6	90209-22292	.WASHER	4	
7	93310-522L4	.BEARING, cylindrical	2	
8	29L-11651-00	.ROD, connecting	2	
9	93306-30549	.BEARING	1	
10	90280-05033	KEY, woodruff	1	
11	93103-25108	OIL SEAL	1	
12	278-17424-01	CIRCLIP 1	1	
13	93103-40077	OIL SEAL	1	
14	1UA-11631-00-94	PISTON (STD)	2	
	1UA-11635-00	PISTON (0.25MM O/S)	2	AP
	1UA-11636-00	PISTON (0.50MM O/S)	2	AP
15	1UA-11610-00	PISTON RING SET (STD)	2	
	1UA-11610-10	PISTON RING SET (1ST O/S)	2	AP
	1UA-11610-20	PISTON RING SET (2ND O/S)	2	AP
16	4L0-11633-00	PIN, piston	2	
17	93310-316H6	BEARING, cylindrical	2	
18	4V2-11634-00	CLIP, piston pin	4	

Copyright(C) 2009 YAMAHA MOTOR CO. LTD. JAPAN All rights reserved

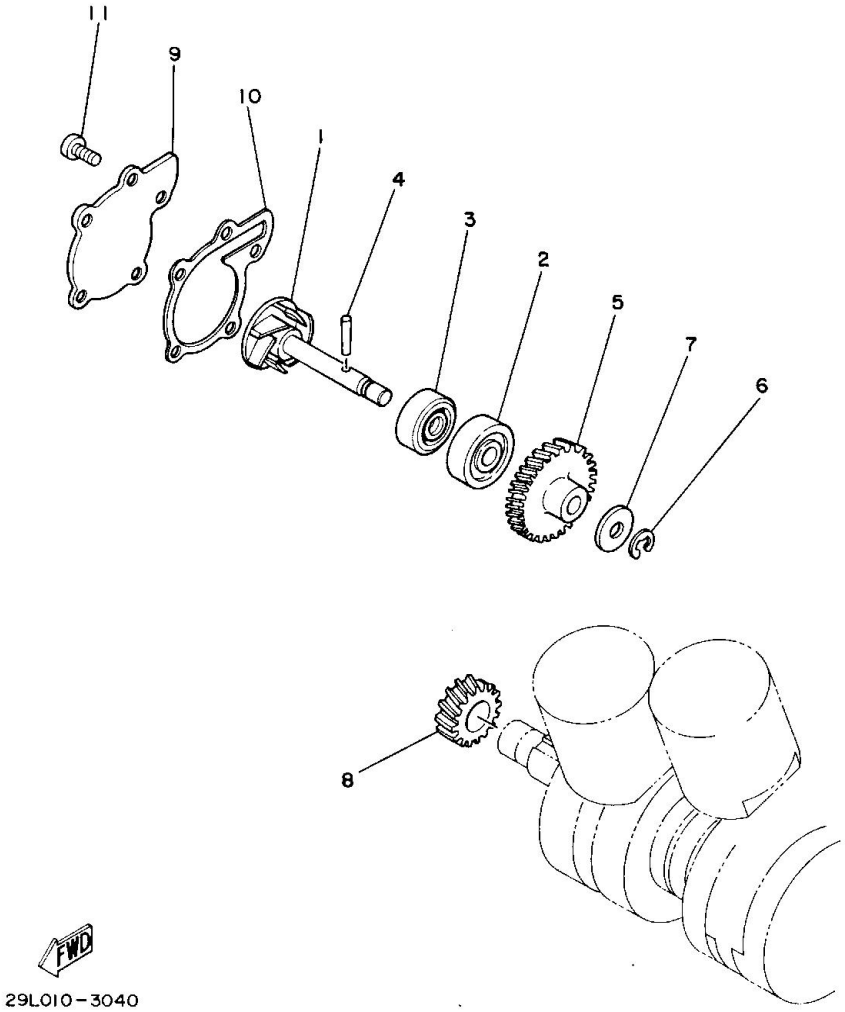

Fig. 03 WATER PUMP

N° référen	Référence de la pièce	Description		Remarques
1	4L0-12450-01	IMPELLER SHAFT ASSY	1	
2	93306-30003	BEARING (B6300Z)	1	
3	93103-10147	OIL SEAL	1	
4	93603-22028	PIN, dowel	1	
5	4L0-12459-00	GEAR, impeller shaft	1	
6	99001-07600	CIRCLIP	1	
7	90201-08784	WASHER, plate	1	
8	4L0-12436-00	GEAR, drive	1	
9	4L0-12422-00	COVER, housing	1	
10	4L0-12428-00	GASKET, housing cover 2	1	
11	92501-06014	SCREW, pan head	5	

Copyright(C) 2009 YAMAHA MOTOR CO. LTD. JAPAN All rights reserved

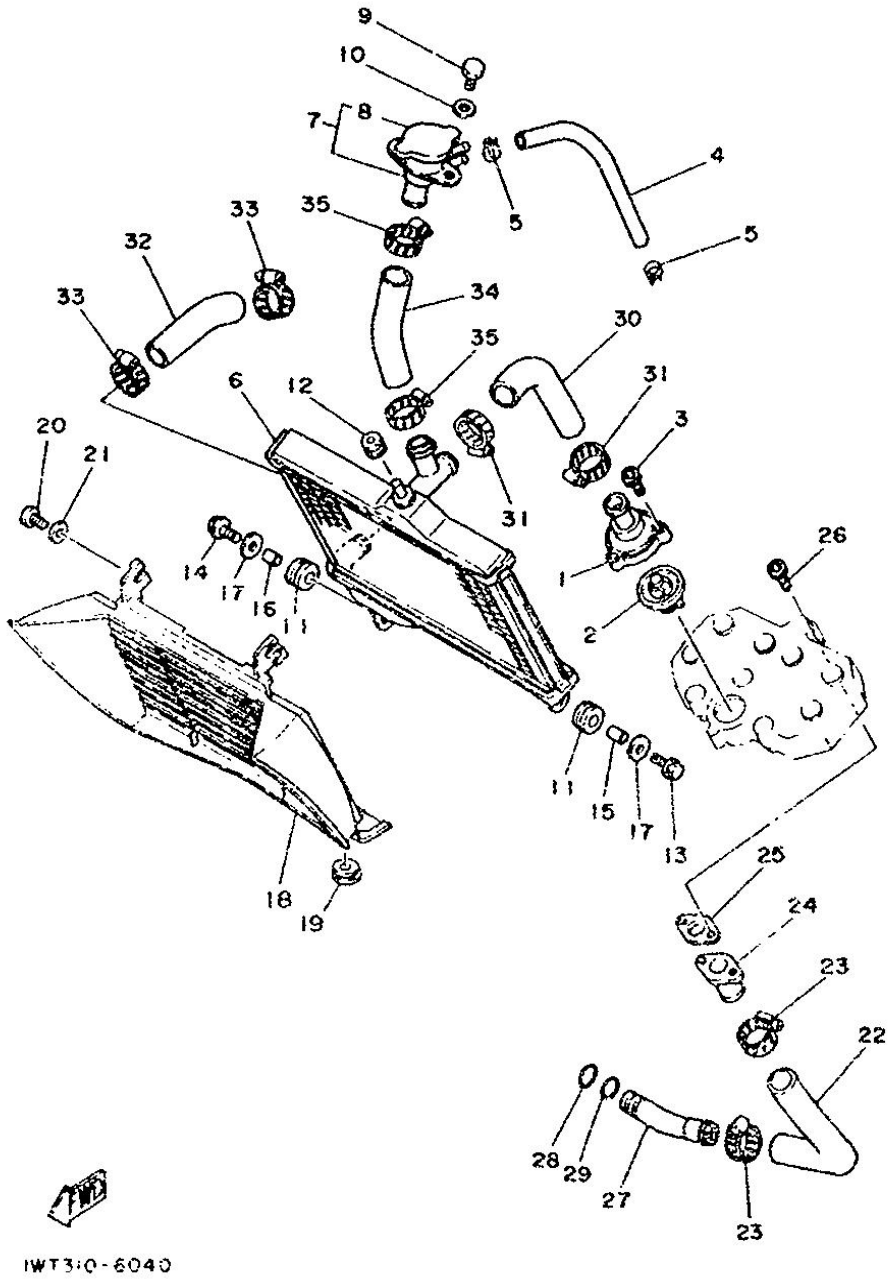

Fig. 04 RADIATOR & HOSE

N° référen	Référence de la pièce	Description		Remarques
1	29L-12446-00	JOINT	1	
2	29L-12411-00	THERMOSTAT	1	
3	91316-05020	BOLT	3	
4	29L-12485-00	PIPE 5	1	
5	90467-13083	CLIP	2	
6	29L-12461-00	RADIATOR ASSY	1	
7	29L-12590-00	CONDUCTION ASSY	1	
8	22W-12462-00	.CAP, radiator	1	
9	97301-06016	BOLT	2	
10	90201-06067	WASHER, plate	2	
11	90480-15363	GROMMET	2	
12	90480-16284	GROMMET	1	
13	95806-06025	BOLT, flange	1	
14	95806-06020	BOLT, flange	1	
15	90387-07392	COLLAR	1	
16	90387-07390	COLLAR	1	
17	90201-060A3	WASHER, plate	2	
18	51L-12467-00	COVER, radiator	1	
19	90480-12014	GROMMET	2	
20	92506-06016	SCREW, pan head	2	
21	90201-06380	WASHER, plate	2	
22	29L-12481-00	PIPE 1	1	
23	90460-27219	CLAMP, hose	2	
24	4L0-12479-00	JOINT	1	
25	4L0-12435-00	GASKET	1	
26	91316-06020	BOLT	2	
27	29L-12469-00	JOINT 1	1	

Copyright(C) 2009 YAMAHA MOTOR CO. LTD. JAPAN All rights reserved

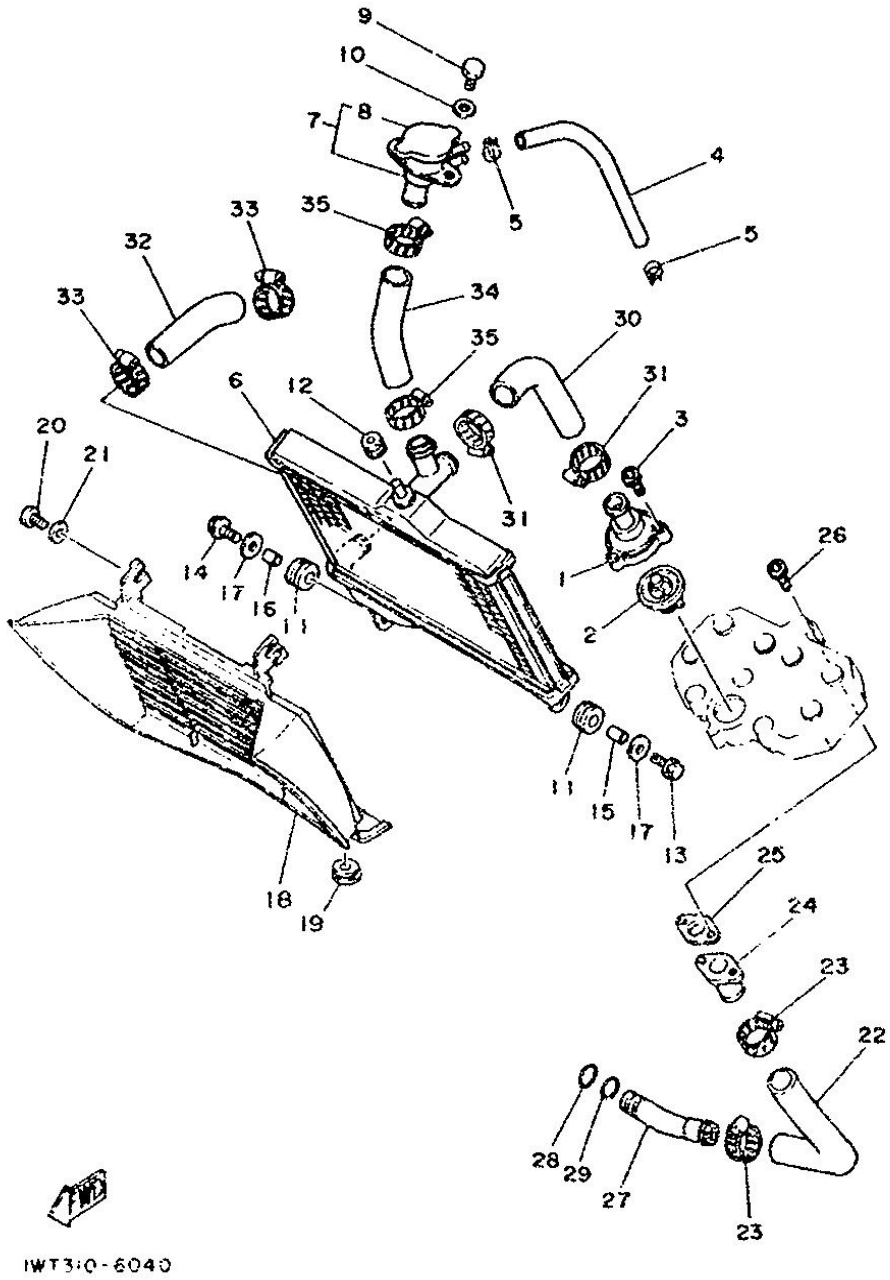

Fig. 04 RADIATOR & HOSE

N° référen	Référence de la pièce	Description		Remarques
28	93210-17239	O-RING	1	
29	93440-19083	CIRCLIP	1	
30	29L-12482-00	PIPE 2	1	
31	90460-27219	CLAMP, hose	2	
32	4L0-12484-00	PIPE 4	1	
33	90460-27219	CLAMP, hose	2	
34	29L-12483-00	PIPE 3	1	
35	90460-27219	CLAMP, hose	2	

Copyright(C) 2009 YAMAHA MOTOR CO. LTD. JAPAN All rights reserved

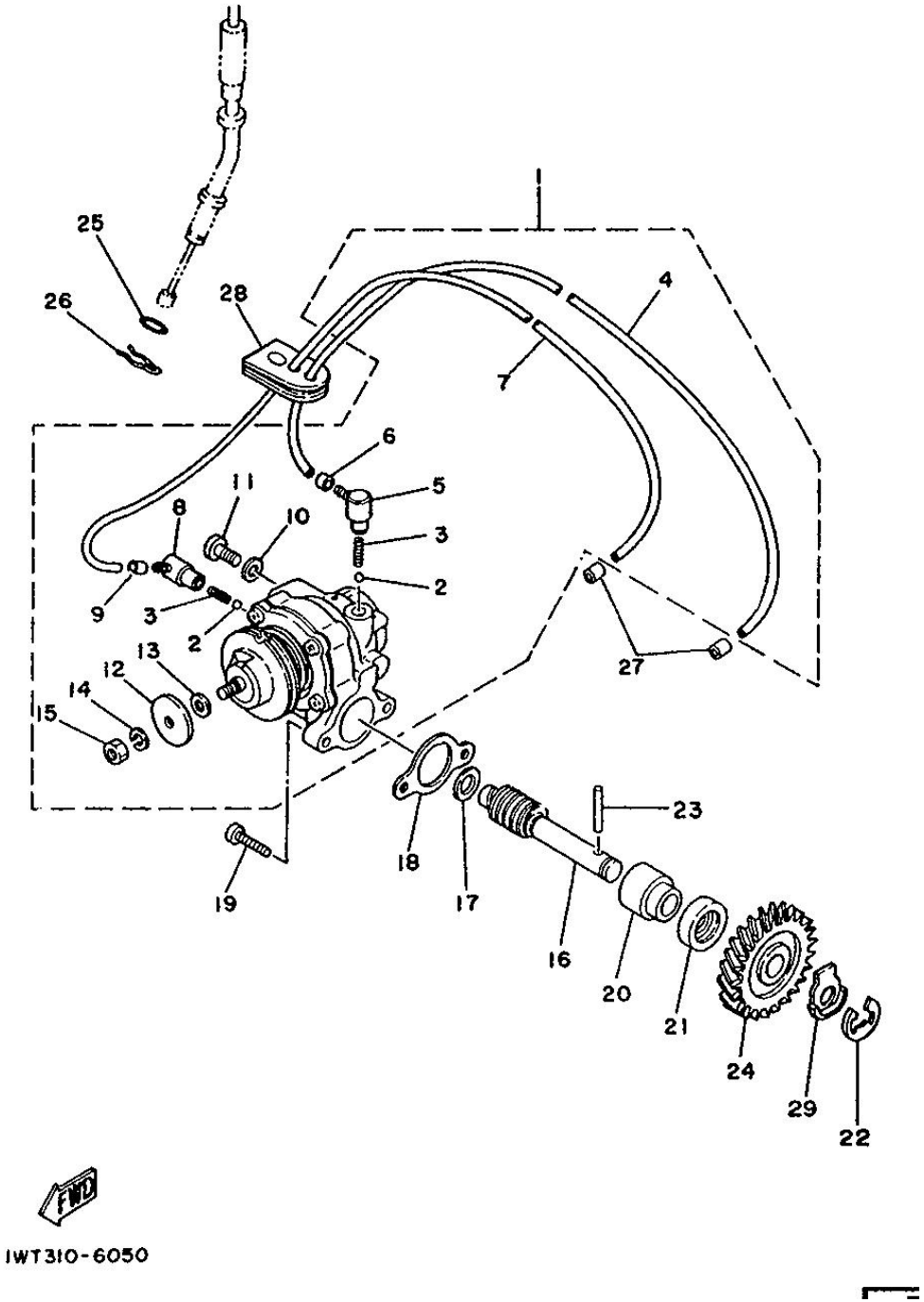

Fig. 05 OIL PUMP

N° référen	Référence de la pièce	Description		Remarques
1	1UA-13101-00	OIL PUMP ASSY	1	
2	93505-32002	.BALL	2	
3	278-13169-00	.SPRING, check ball	2	
4	90445-05203	.HOSE	1	
5	353-13552-01	.NOZZLE	1	
6	90468-02033	.CLIP	1	
7	90445-05765	.HOSE	1	
8	353-13552-01	.NOZZLE	1	
9	90468-02033	.CLIP	1	
10	90430-04004	.GASKET	1	
11	98901-04008	.SCREW, bind	1	
12	137-13138-01	.PLATE, adjusting	1	
13	137-13137-00-03	.SHIM (0.3T)	1	UR
	137-13137-00-05	.SHIM (0.5T)	1	UR
	137-13137-00-10	.SHIM (1.0T)	1	UR
14	92901-05100	.WASHER, spring	1	
15	95301-05600	.NUT	1	
16	4L0-13175-02	SHAFT, worm	1	
17	90201-08624	WASHER, plate	1	
18	8Y0-13116-00	GASKET, pump case	1	
19	98501-05016	SCREW, pan head	2	
20	1E7-13176-00	METAL, worm shaft outer	1	
21	93101-10002	OIL SEAL	1	
22	93430-08036	CIRCLIP	1	
23	93603-22028	PIN, dowel	1	
24	4L0-13178-00	GEAR, pump drive	1	
25	93210-07100	O-RING	1	

Copyright(C) 2009 YAMAHA MOTOR CO. LTD. JAPAN All rights reserved

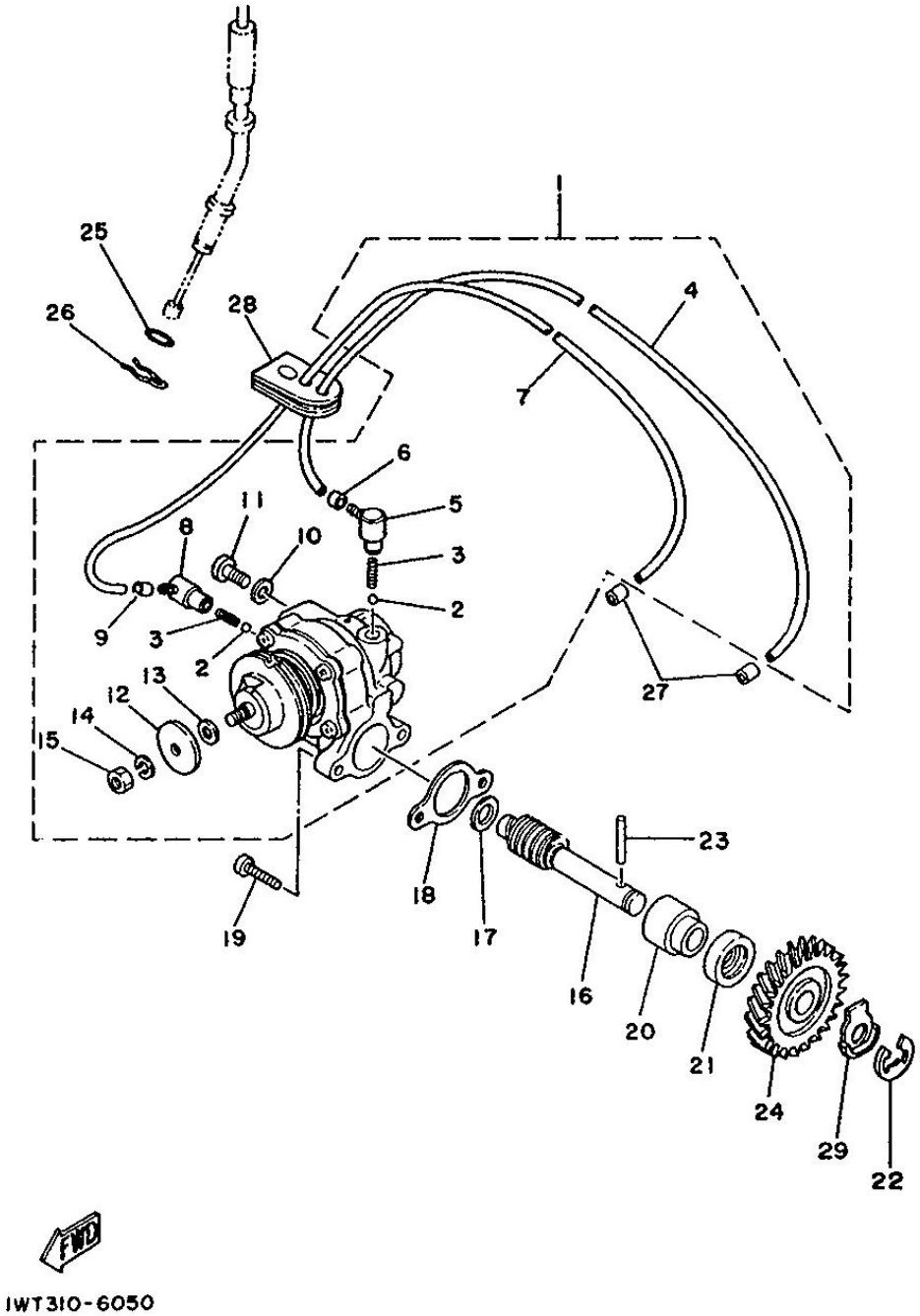

Fig. 05 OIL PUMP

N° référen	Référence de la pièce	Description		Remarques
26	90468-08086	CLIP	1	
27	90468-02033	CLIP	2	
28	4L0-13174-00	HOLDER, oil pipe	1	
29	90215-10253	WASHER, lock	1	

Copyright(C) 2009 YAMAHA MOTOR CO. LTD. JAPAN All rights reserved

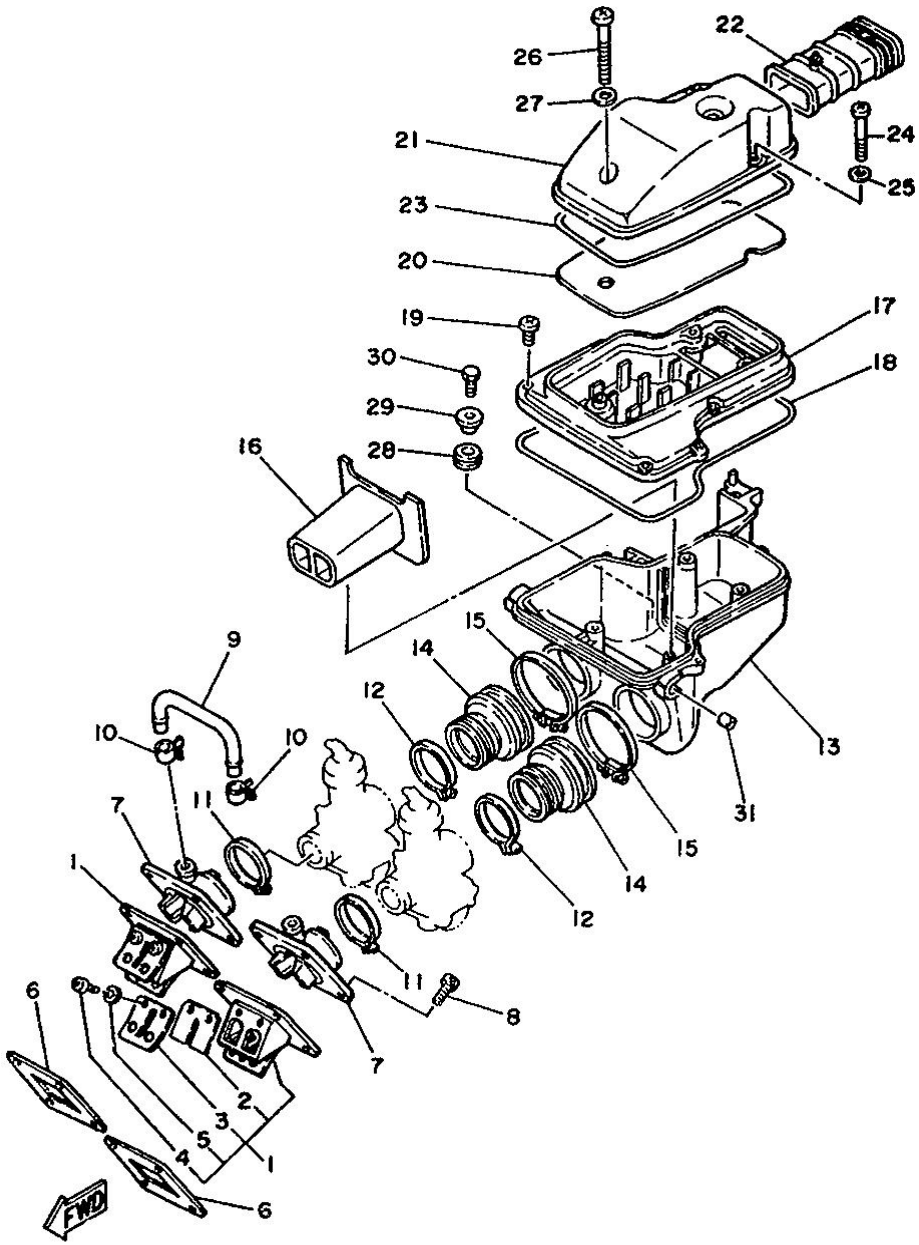

Fig. 06 INTAKE

N° référen	Référence de la pièce	Description		Remarques
1	1UA-13610-00	REED VALVE ASSY	2	
2	1UA-13613-00	.REED, valve	2	
3	1UA-13616-00	.STOPPER, reed valve	2	
4	98501-03008	.SCREW, pan head	4	
5	92990-03100	.WASHER, spring	4	
6	31K-13621-00	GASKET, valve seat	2	
7	31K-13565-00	JOINT, carburetor	2	
8	91316-06025	BOLT	8	
9	29L-14465-00	PIPE	1	
10	90467-20085	CLIP	2	
11	90460-44108	CLAMP, hose	2	
12	90460-49058	CLAMP, hose	2	
13	51L-14411-00	CASE, air cleaner 1	1	
14	29L-14453-00	JOINT, air cleaner 1	2	
15	90460-68230	CLAMP, hose	2	
16	51L-1441F-00	PARTITION, air cleaner case	1	
17	29L-14421-00	CASE, air cleaner 2	1	
18	29L-14452-00	SEAL	1	
19	97701-50525	SCREW, tapping	6	
20	29L-14451-00	ELEMENT, air cleaner	1	
21	29L-14412-00	CAP, cleaner case 1	1	
22	29L-14437-00	DUCT	1	
23	11H-14452-00	SEAL	1	
24	92501-06055	SCREW, pan head	2	
25	92901-06600	WASHER, plate	2	
26	92501-06075	SCREW, pan head	1	
27	92901-06600	WASHER, plate	1	

Copyright(C) 2009 YAMAHA MOTOR CO. LTD. JAPAN All rights reserved

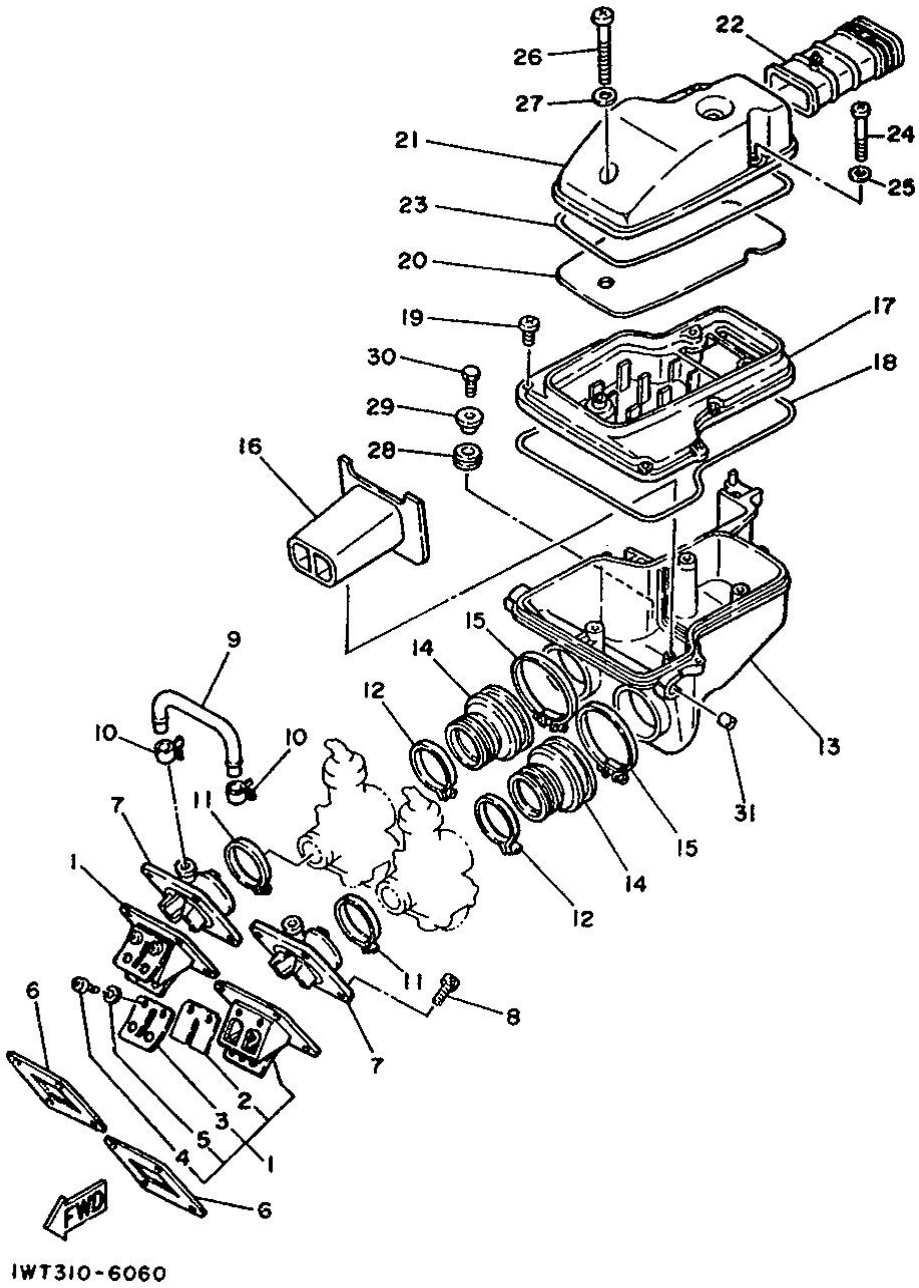

Fig. 06 INTAKE

N° référen	Référence de la pièce	Description		Remarques
28	90480-16233	GROMMET	1	
29	90387-07037	COLLAR	1	
30	97301-06018	BOLT	1	
31	90445-12718	HOSE	2	

Copyright(C) 2009 YAMAHA MOTOR CO. LTD. JAPAN All rights reserved

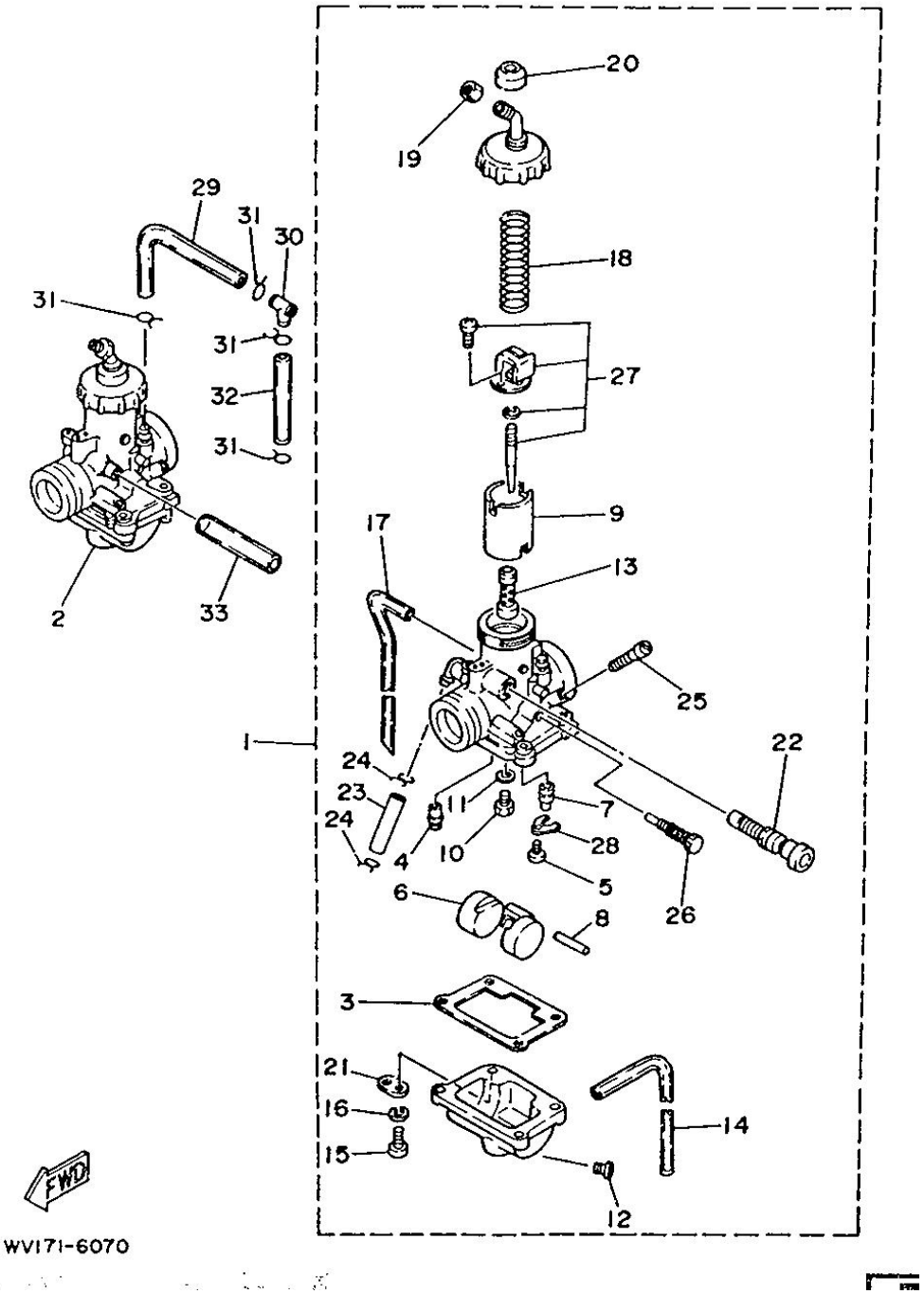

Fig. 07 CARBURETOR

N° référen	Référence de la pièce	Description		Remarques
1	1UA-14101-00	CARBURETOR ASSY 1	1	
2	1UA-14102-00	CARBURETOR ASSY 2	1	
3	304-14184-00	.GASKET, float chamber	1	
4	260-14142-27	.JET, pilot (# 27.5)	1	
5	98501-04008	.SCREW, pan head	1	
6	4L0-14185-00	.FLOAT	1	
7	1UA-14190-28	.NEEDLE VALVE ASSY	1	
8	537-14186-00	.PIN, float	1	
9	29K-14112-20	.VALVE, throttle 1	1	UR # 1
	29K-14113-20	.VALVE, throttle 2	1	UR # 2
10	137-14143-37	.JET, main (#185)	1	
11	137-14153-00	.WASHER, main jet	1	
12	12R-14191-00	.PLUG, drain	1	
13	1XA-14141-28	.NOZZLE, main	1	
14	4L0-14196-00	.PIPE	1	
15	98511-04016	.SCREW, pan head	4	
16	92902-04100	.WASHER, spring	4	
17	4L0-14197-00	.PIPE	1	
18	4L0-14131-00	.SPRING, throttle valve	1	
19	802-14161-00	.NUT, cable adjusting	1	
20	3X3-14169-00	.CAP	1	
21	500-14146-00	.PLATE	1	
22	4U5-14171-00	.PLUNGER, starter	1	
23	51L-14987-00	.HOSE	1	
24	90467-10008	.CLIP	2	
25	10W-14104-00	.AIR SCREW SET	1	
26	23L-14103-00	THROTTLE SCREW SET	1	

Copyright(C) 2009 YAMAHA MOTOR CO. LTD. JAPAN All rights reserved

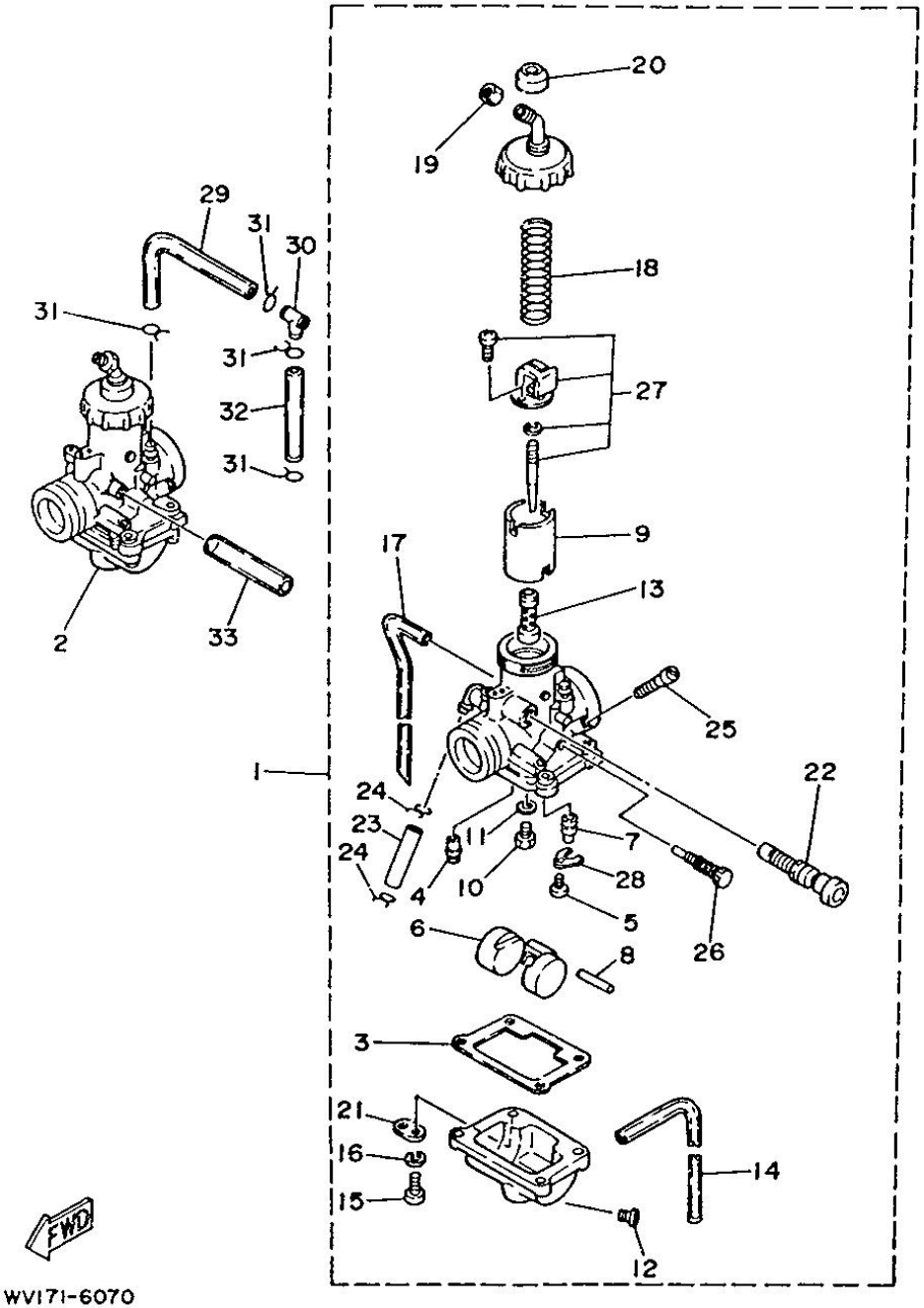

Fig. 07 CARBURETOR

N° référen	Référence de la pièce	Description		Remarques
27	1UA-1490J-00	.NEEDLE SET	1	
28	2H0-14146-00	.PLATE, valve seat	1	
29	1WT-24311-00	PIPE, fuel 1	1	
30	90413-07023	WAY 3	1	
31	90467-10041	CLIP	4	
32	90445-11697	HOSE	1	
33	90445-09012	HOSE	1	

Copyright(C) 2009 YAMAHA MOTOR CO. LTD. JAPAN All rights reserved

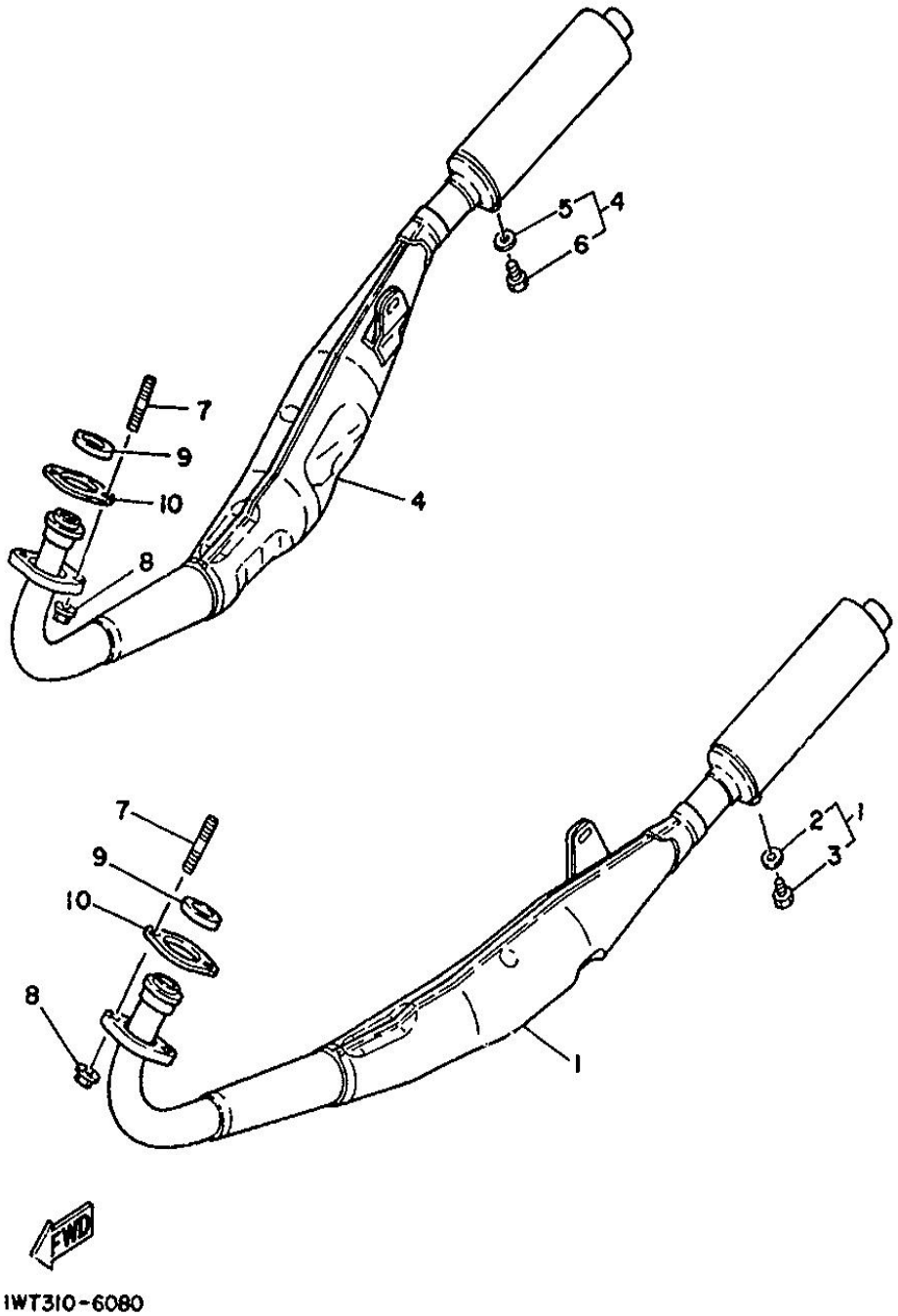

Fig. 08 EXHAUST

N° référen	Référence de la pièce	Description		Remarques
1	1UA-14710-00	MUFFLER ASSY 1	1	
2	92906-06600	.WASHER, plate	1	
3	90101-06576	.BOLT	1	
4	1UA-14720-00	MUFFLER ASSY 2	1	
5	92906-06600	.WASHER, plate	1	
6	90101-06576	.BOLT	1	
7	90116-08365	BOLT, stud	4	
8	90185-08097	NUT, self-locking	4	
9	29L-14613-00	GASKET, exhaust pipe	2	
10	29L-14643-00	GASKET 3	2	

Copyright(C) 2009 YAMAHA MOTOR CO. LTD. JAPAN All rights reserved

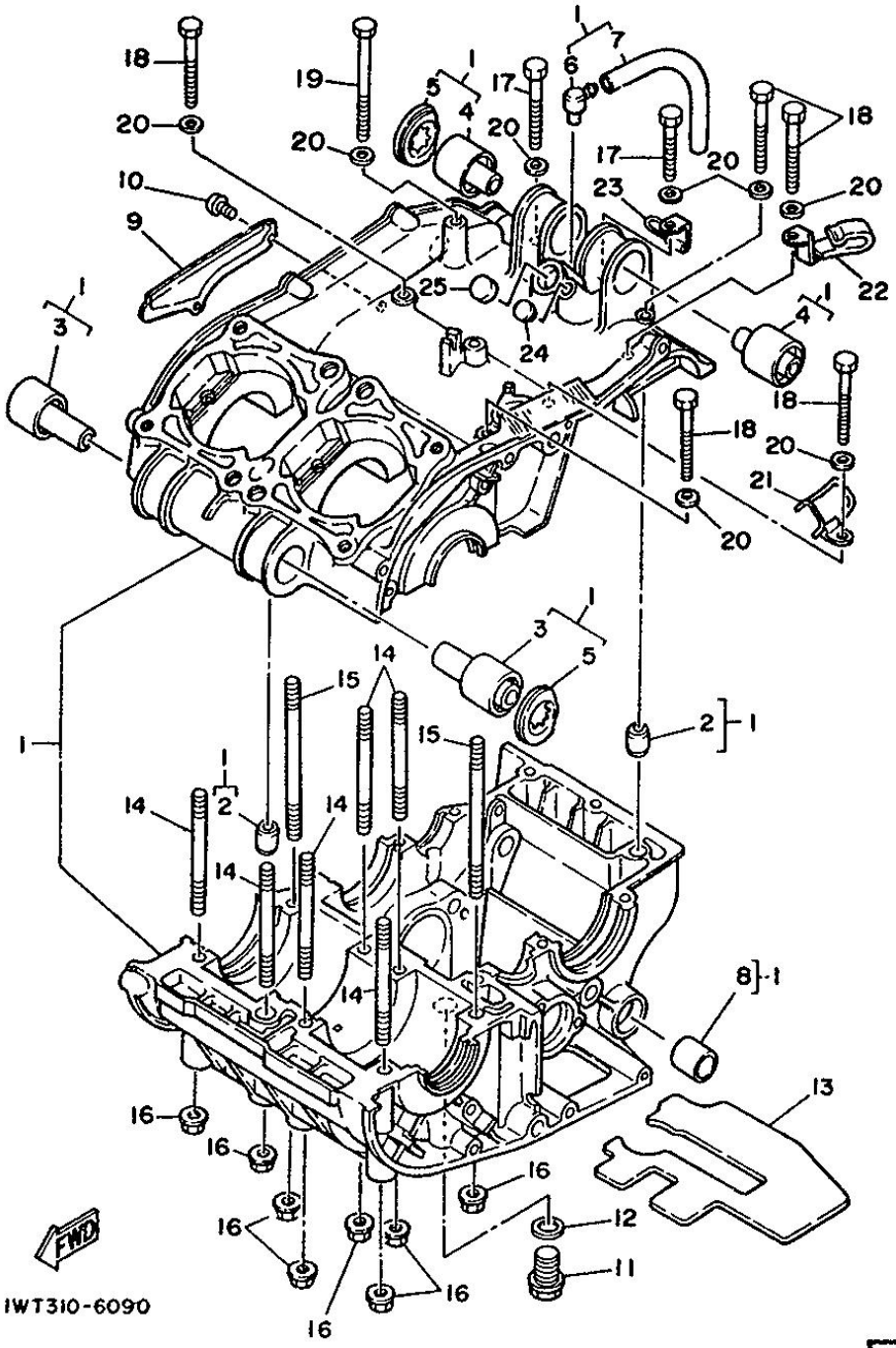

Fig. 09 CRANKCASE

N° référen	Référence de la pièce	Description		Remarques
1	29L-15100-03	CRANKCASE ASSY	1	
2	99510-12016	.PIN, dowel	2	
3	4L0-15316-00	.DAMPER, engine mount 1	2	
4	4L0-15326-00	.DAMPER, engine mount 2	2	
5	4L0-15328-00	.SPACER, damper	2	
6	498-15371-00	.BREATHER	1	
7	90446-07112	.HOSE	1	
8	90383-12022	.BUSH, formed	1	
9	278-15492-01	COVER	1	
10	98501-05010	SCREW, pan head	2	
11	90340-14010	PLUG, straight screw	1	
12	137-15353-00	GASKET, drain	1	
13	48H-15337-00	DAMPER 4	1	
14	90116-08064	BOLT, stud	6	
15	90116-08232	BOLT, stud	2	
16	95701-08500	NUT, flange	8	
17	97311-06045	BOLT	2	
18	97311-06060	BOLT	5	
19	97311-06090	BOLT	1	
20	92901-06200	WASHER, plain	8	
21	90462-16130	CLAMP	1	
22	90465-08125	CLAMP	1	
23	90465-06094	CLAMP	1	
24	90338-05038	PLUG	1	
25	90338-16029	PLUG	1	

Copyright(C) 2009 YAMAHA MOTOR CO. LTD. JAPAN All rights reserved

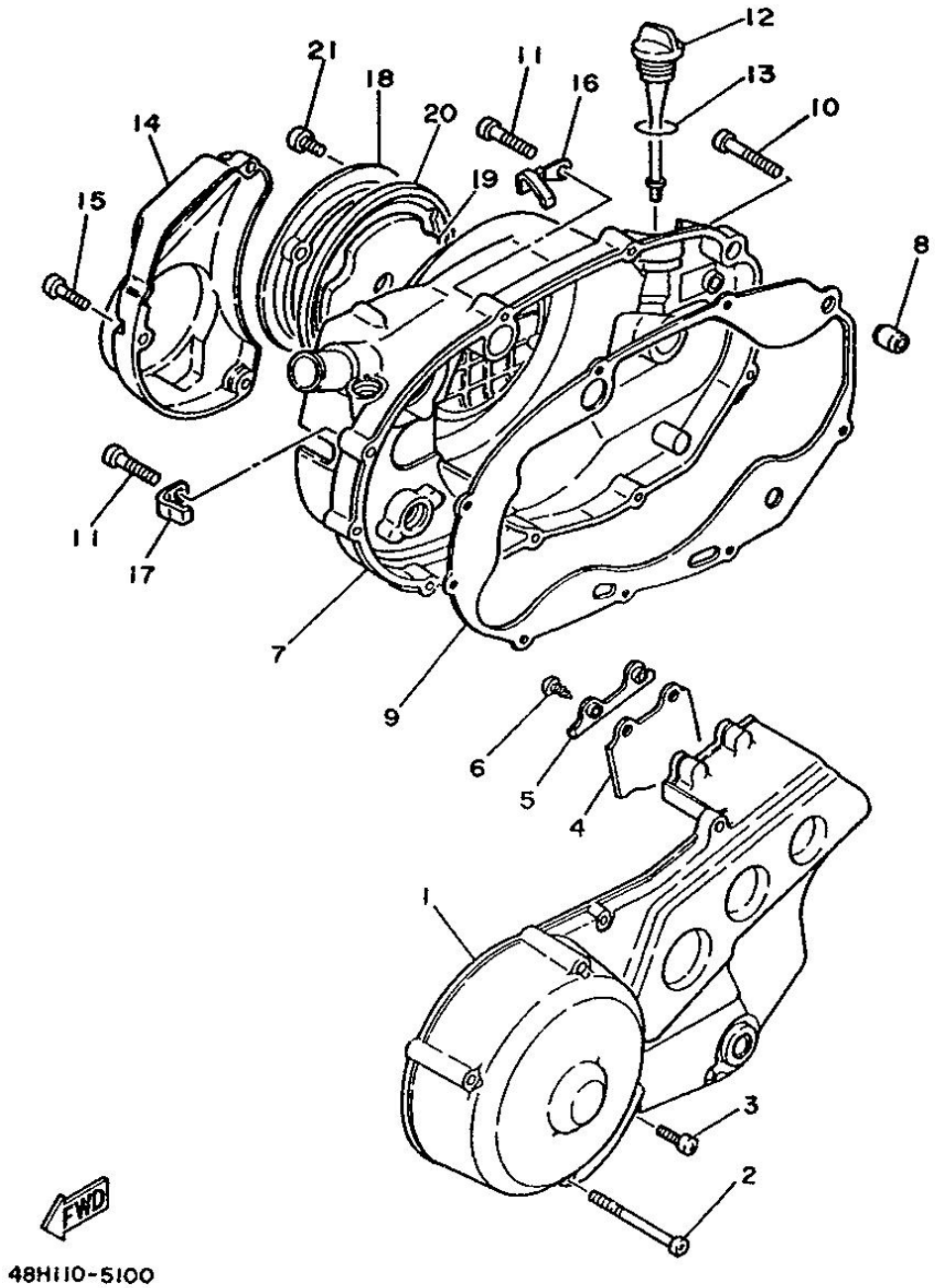

Fig. 10 CRANKCASE COVER 1

N° référen	Référence de la pièce	Description		Remarques
1	29L-15410-00	CRANKCASE COVER ASSY 1	1	
2	92506-06055	SCREW, pan head	3	
3	92506-06020	SCREW, pan head	4	
4	1A0-15497-00	PLATE, dust seal	1	
5	1A0-15491-00	PROTECTOR	1	
6	97706-50512	SCREW, tapping	2	
7	29L-15421-00	COVER, crankcase 2	1	
8	99510-12016	PIN, dowel	1	
9	4L0-15461-01	GASKET, crankcase cover 2	1	
10	92506-06040	SCREW, pan head	1	
11	92506-06030	SCREW, pan head	8	
12	4L0-15362-00	PLUG, oil level	1	
13	93210-19123	O-RING	1	
14	48H-15420-00	CRANKCASE COVER ASSY 2	1	
15	92506-06020	SCREW, pan head	3	
16	90462-08071	CLAMP	1	
17	90462-08070	CLAMP	1	
18	29L-15431-00	COVER, crankcase 3	1	
19	31K-15317-00	SPACER, engine mount	1	
20	48H-15327-00	SPACER, engine mount	1	
21	98506-05014	SCREW, pan head	3	

Copyright(C) 2009 YAMAHA MOTOR CO. LTD. JAPAN All rights reserved

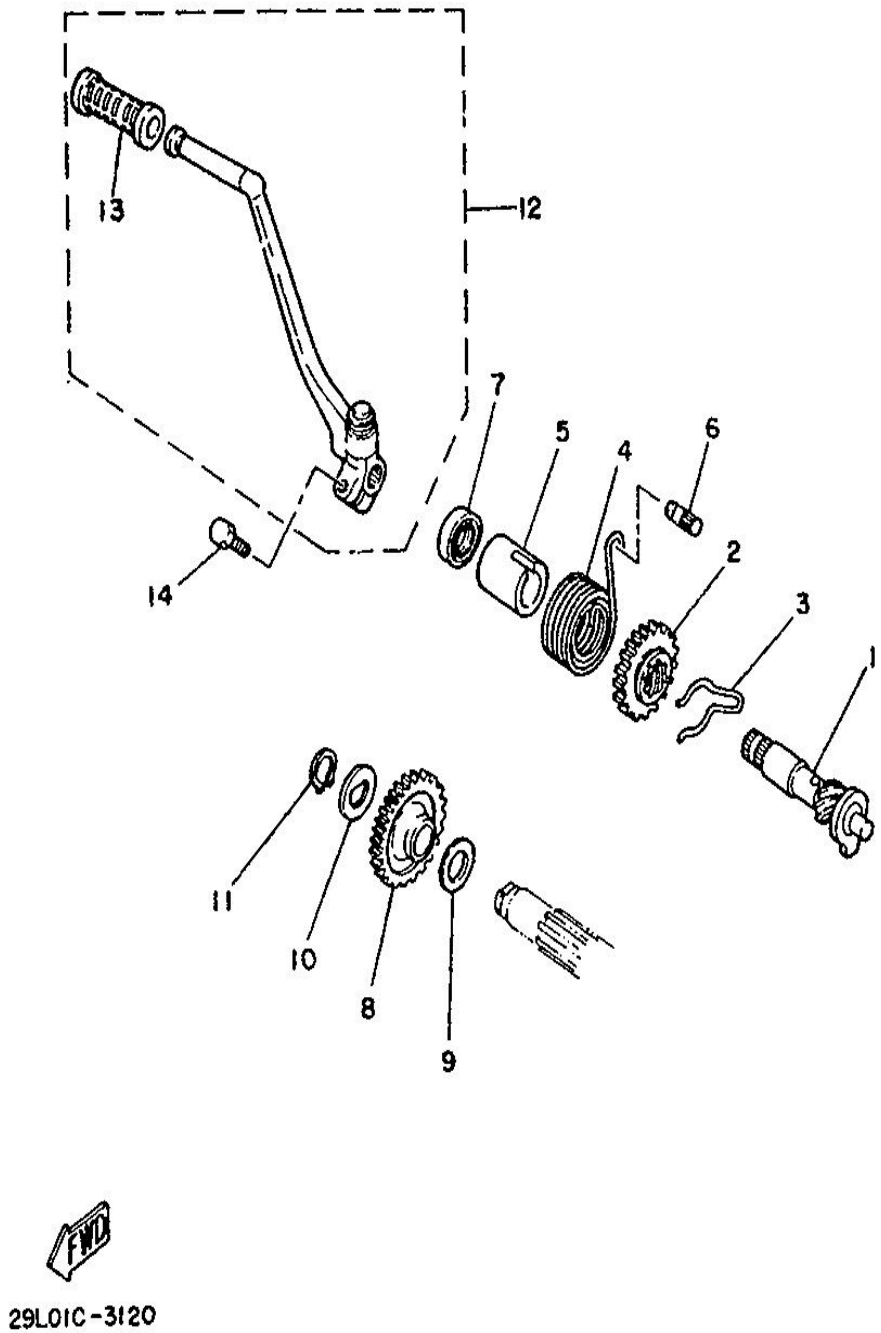

Fig. 11 STARTER

N° référen	Référence de la pièce	Description		Remarques
1	4L0-15660-00	KICK AXLE ASSY	1	
2	4L0-15641-00	GEAR, kick (22T)	1	
3	90468-26091	CLIP	1	
4	90508-30051	SPRING, torsion	1	
5	4L0-15666-00	SPACER	1	
6	248-15668-00	STOPPER	1	
7	93101-20048	OIL SEAL	1	
8	4L0-15651-00	GEAR, kick idle (26T)	1	
9	164-17417-00-10	SHIM 1 (1.0T)	1	UN
10	90214-15020	WASHER, claw	1	
11	99009-15400	CIRCLIP	1	
12	51L-15620-01	KICK CRANK ASSY	1	
13	156-15618-01	.COVER, kick lever	1	
14	97326-08030	BOLT	1	

Copyright(C) 2009 YAMAHA MOTOR CO. LTD. JAPAN All rights reserved

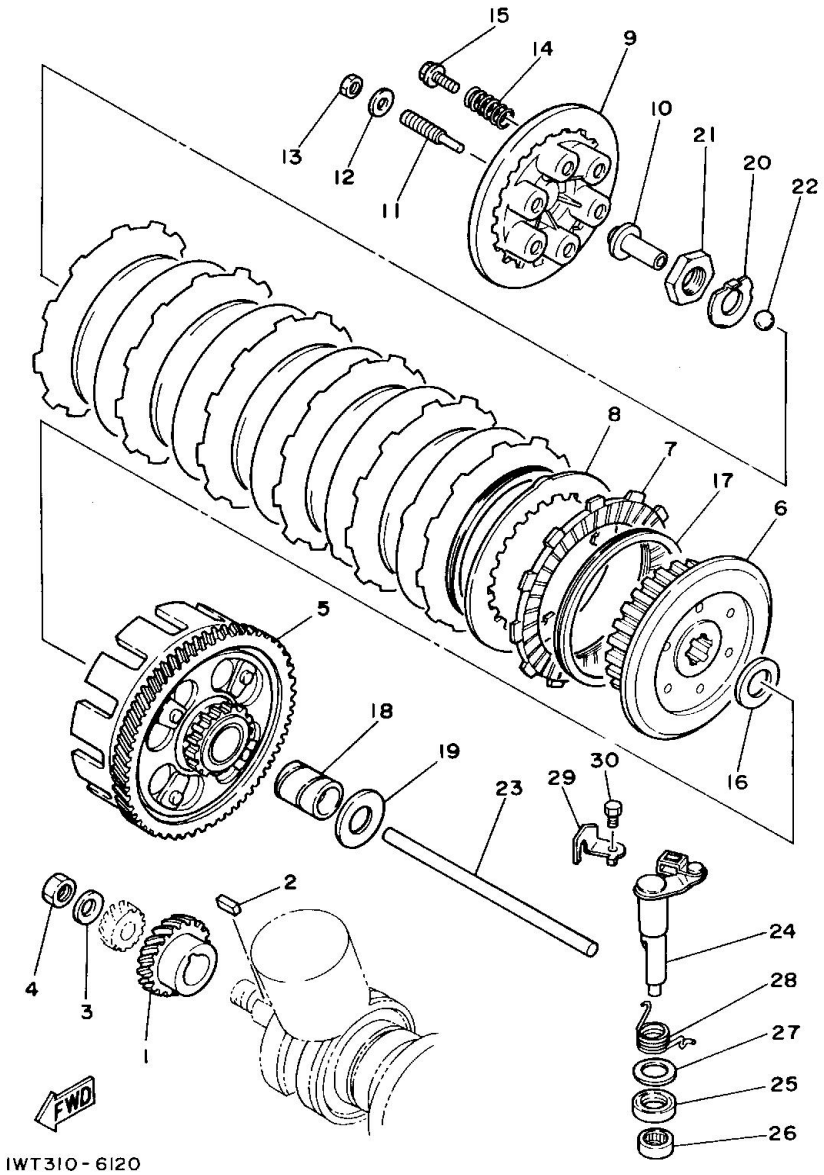

Fig. 12 CLUTCH

N° référen	Référence de la pièce	Description		Remarques
1	4L0-16111-00	GEAR, primary drive (23T)	1	
2	90282-07023	KEY, straight	1	
3	90208-16019	WASHER, conical spring	1	
4	90170-16182	NUT	1	
5	31K-16150-10	PRIMARY DRIVEN GEAR COMP.	1	
6	1A0-16371-00	BOSS, clutch	1	
7	4L0-16321-01	PLATE, friction	7	
8	498-16325-00	PLATE, clutch 2	6	
9	29L-16351-00	PLATE, pressure 1	1	
10	29L-16356-00	ROD, push 1	1	
11	90149-08143	SCREW	1	
12	92901-08200	WASHER, plain	1	
13	95311-08700	NUT	1	
14	90501-23138	SPRING, compression	6	
15	90159-06016	SCREW, with washer	6	
16	360-16154-00	PLATE, thrust 1	1	
17	278-16367-00	RING, cushion	7	
18	278-16181-01	SPACER 1	1	
19	360-16154-00	PLATE, thrust 1	1	
20	90215-20223	WASHER, lock	1	
21	90170-20320	NUT	1	
22	93515-32029	BALL	1	
23	29L-16357-00	ROD, push 2	1	
24	29L-16380-00	PUSH LEVER ASSY	1	
25	93102-17004	OIL SEAL	1	
26	93315-11720	BEARING, cylindrical	1	
27	90201-17327	WASHER, plate	1	

Copyright(C) 2009 YAMAHA MOTOR CO. LTD. JAPAN All rights reserved

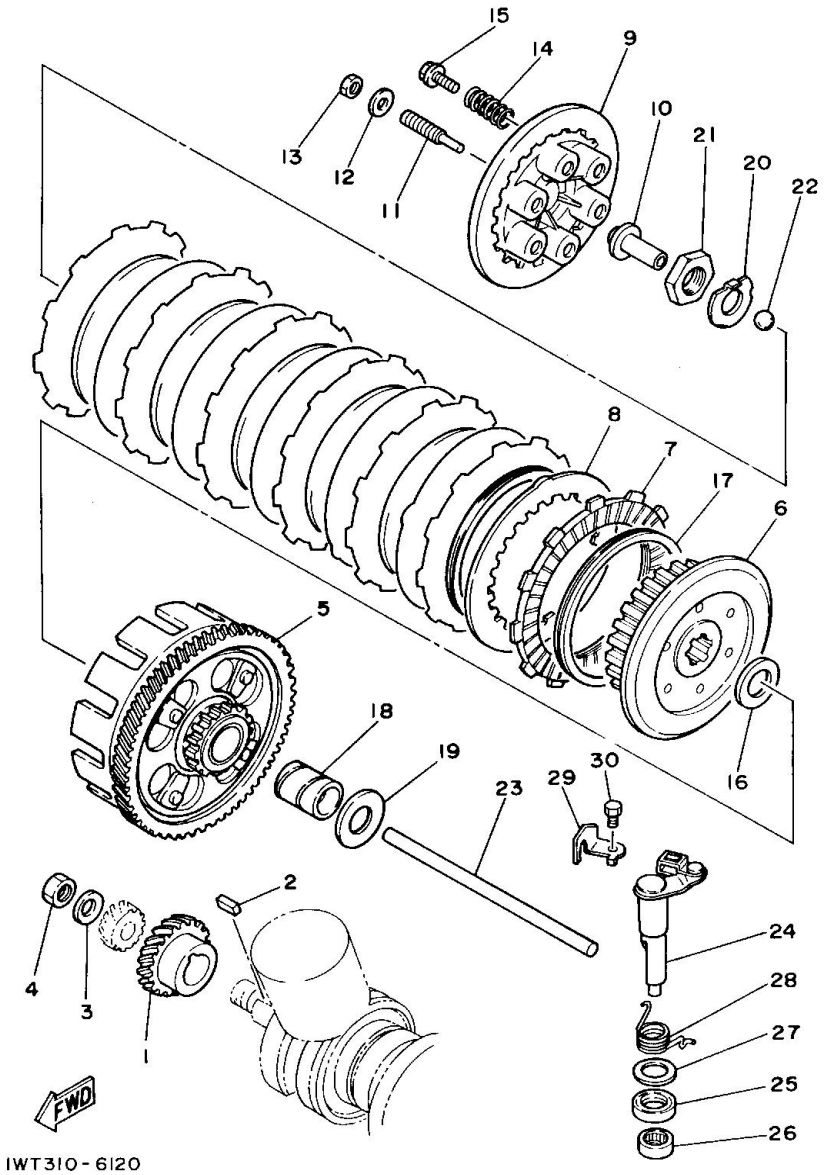

Fig. 12 CLUTCH

N° référen	Référence de la pièce	Description		Remarques
28	90508-16599	SPRING, torsion	1	
29	90465-16239	CLAMP	1	
30	97301-06010	BOLT	1	

Copyright(C) 2009 YAMAHA MOTOR CO. LTD. JAPAN All rights reserved

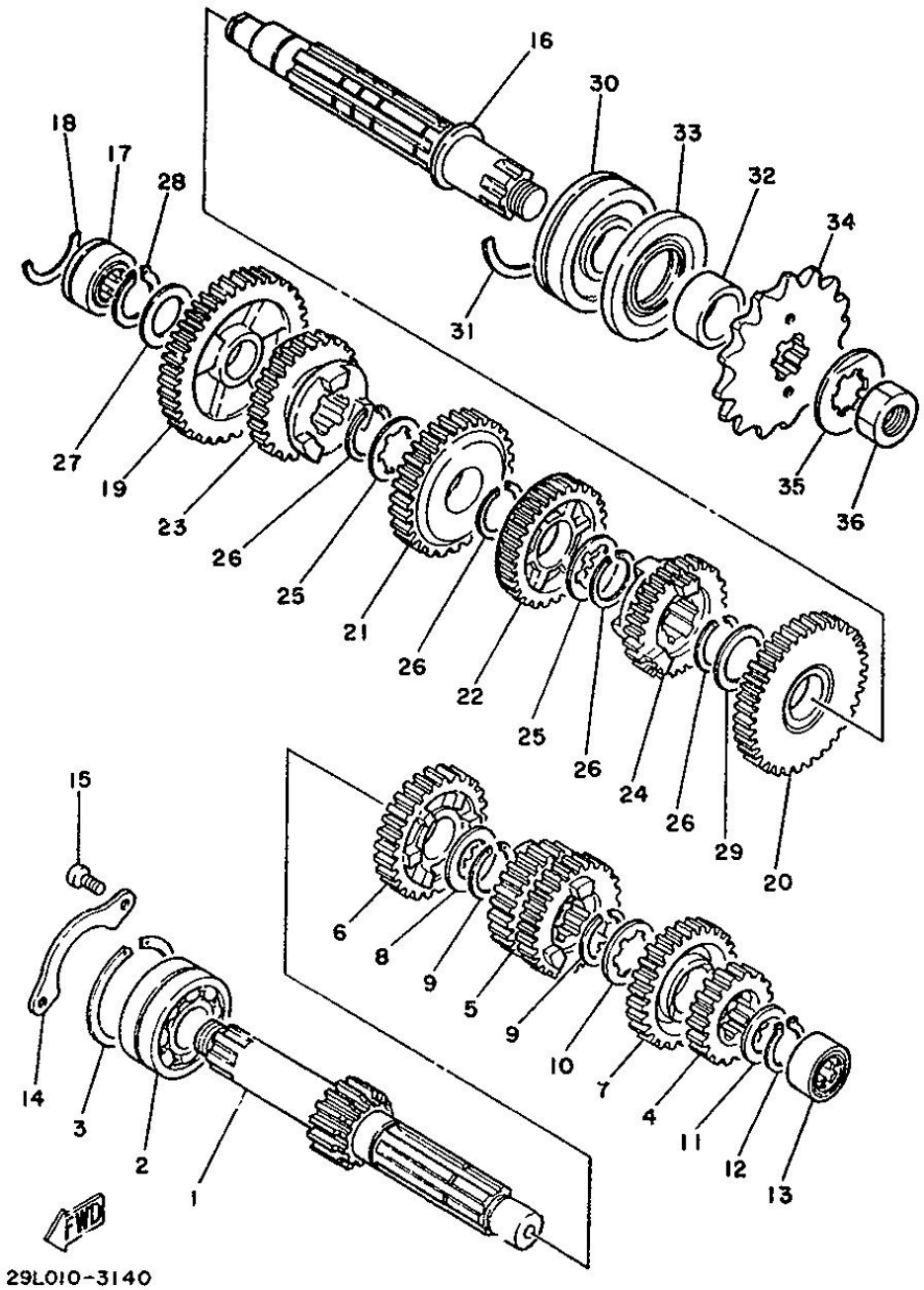

Fig. 13 TRANSMISSION

N° référen	Référence de la pièce	Description		Remarques
1	29L-17411-00	AXLE, main (14T)	1	
2	93305-20502	BEARING (B5205)	1	
3	93440-52009	CIRCLIP	1	
4	29L-17121-00	GEAR, 2nd pinion (18T)	1	
5	29L-17131-00	GEAR, 3rd/4th pinion (22T, 24T)	1	
6	29L-17151-00	GEAR, 5th pinion (26T)	1	
7	29L-17161-00	GEAR, 6th pinion (27T)	1	
8	90201-25490	WASHER, plate	1	
9	93440-25084	CIRCLIP	2	
10	90209-21105	WASHER	1	
11	90201-20266	WASHER, plate (1.0T)	1	
12	99009-20400	CIRCLIP	1	
13	93311-22027	BEARING, cylindrical	1	
14	4L0-17471-00	PLATE, cover	1	
15	92501-06012	SCREW, pan head	2	
16	29L-17421-00	AXLE, drive	1	
17	93311-42045	BEARING, cylindrical	1	
18	278-17425-00	CIRCLIP 2	1	
19	4L0-17211-01	GEAR, 1st wheel (36T)	1	
20	4L0-17221-01	GEAR, 2nd wheel (32T)	1	
21	29L-17231-00	GEAR, 3rd wheel (29T)	1	
22	4L0-17241-01	GEAR, 4th wheel (26T)	1	
23	29L-17251-10	GEAR, 5th wheel (25T)	1	
24	29L-17261-10	GEAR, 6th wheel (24T)	1	
25	90209-21105	WASHER	2	
26	93440-25084	CIRCLIP	4	
27	90201-20276	WASHER, plate	1	

Copyright(C) 2009 YAMAHA MOTOR CO. LTD. JAPAN All rights reserved

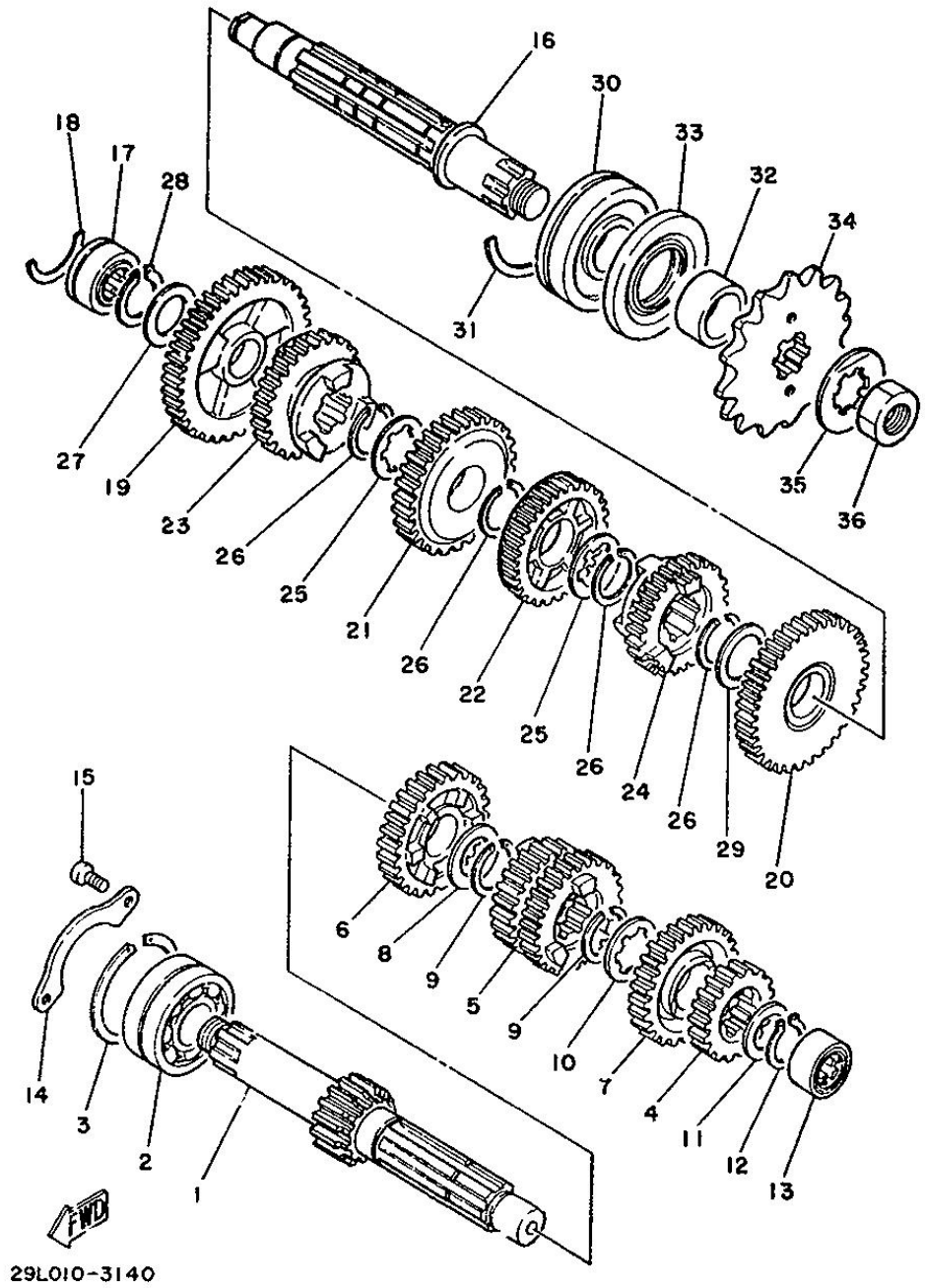

Fig. 13 TRANSMISSION

N° référen	Référence de la pièce	Description		Remarques
28	99009-20400	CIRCLIP	1	
29	90201-25490	WASHER, plate	1	
30	93306-30504	BEARING (B6305N)	1	
31	278-17424-01	CIRCLIP 1	1	
32	90387-257N4	COLLAR	1	
33	93102-35369	OIL SEAL	1	
34	1M1-17461-70	SPROCKET, drive (17T)	1	
35	90215-21239	WASHER, lock	1	
36	90179-18020	NUT	1	

Copyright(C) 2009 YAMAHA MOTOR CO. LTD. JAPAN All rights reserved

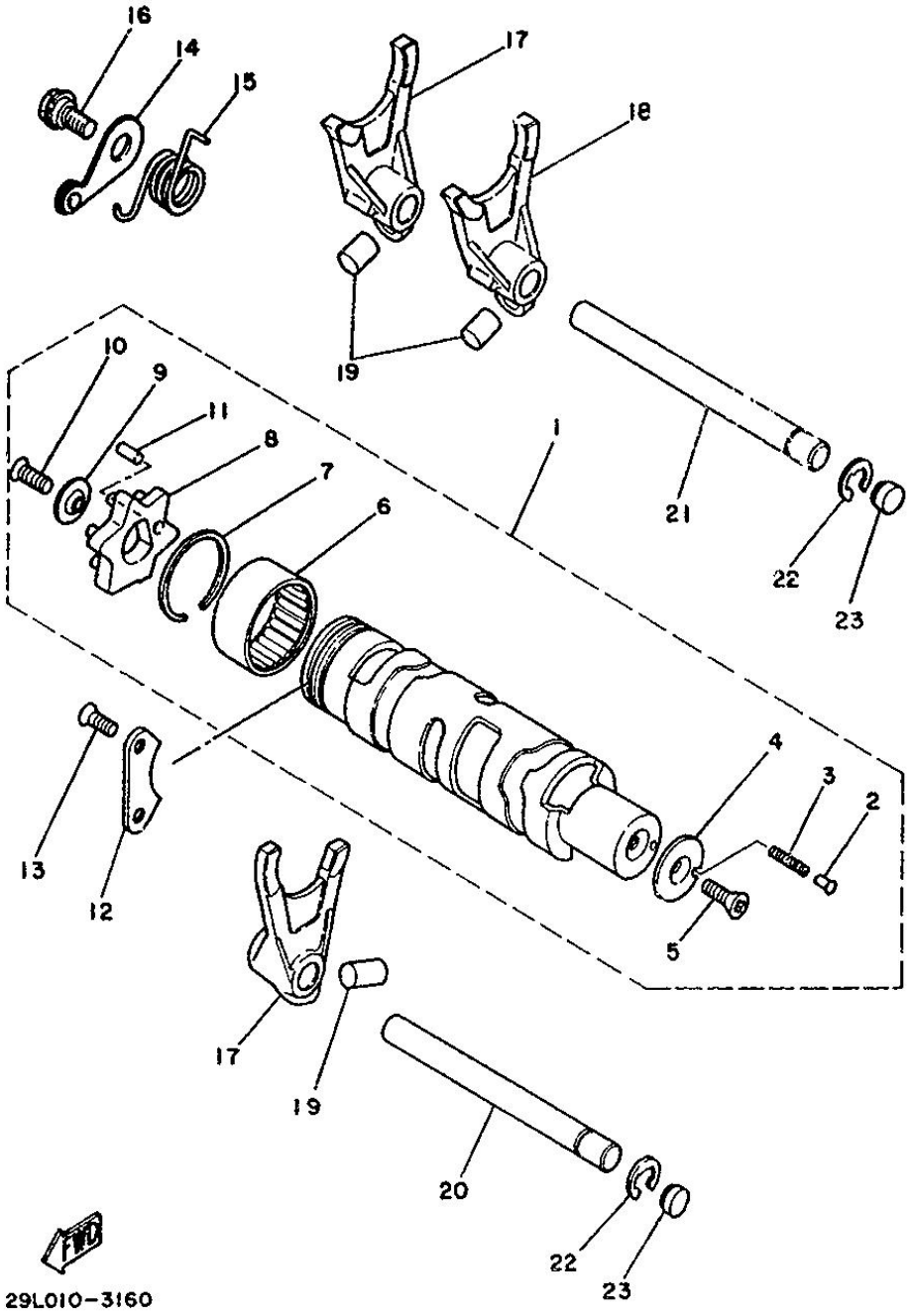

Fig. 14 SHIFT CAM & FORK

N° référen	Référence de la pièce	Description		Remarques
1	29L-18540-00	SHIFT CAM ASSY	1	
2	278-18542-00	.POINT, neutral	1	
3	90501-06022	.SPRING, compression	1	
4	278-18566-00	.PLATE, side 2	1	
5	98701-05012	.SCREW, flat head	1	
6	93315-23612	.BEARING, cylindrical	1	
7	93440-34025	.CIRCLIP	1	
8	4L0-18185-00	.SEGMENT	1	
9	3R4-18561-00	.PLATE, side 1	1	
10	98701-05016	.SCREW, flat head	1	
11	93604-12037	.PIN, dowel	1	
12	4L0-18562-00	PLATE, stopper 2	1	
13	92701-06015	SCREW, flat head	2	
14	4L0-18140-00	STOPPER LEVER ASSY	1	
15	90508-26452	SPRING, torsion	1	
16	1W1-18177-00	BOLT, stopper	1	
17	4L0-18511-00	FORK, shift 1	2	
18	4L0-18512-00	FORK, shift 2	1	
19	90250-08017	PIN, straight	3	
20	4L0-18531-01	BAR, shift fork guide 1	1	
21	29L-18535-00	BAR, shift fork guide 2	1	
22	93430-08036	CIRCLIP	2	
23	90334-10014	PLUG, straight	2	

Copyright(C) 2009 YAMAHA MOTOR CO. LTD. JAPAN All rights reserved

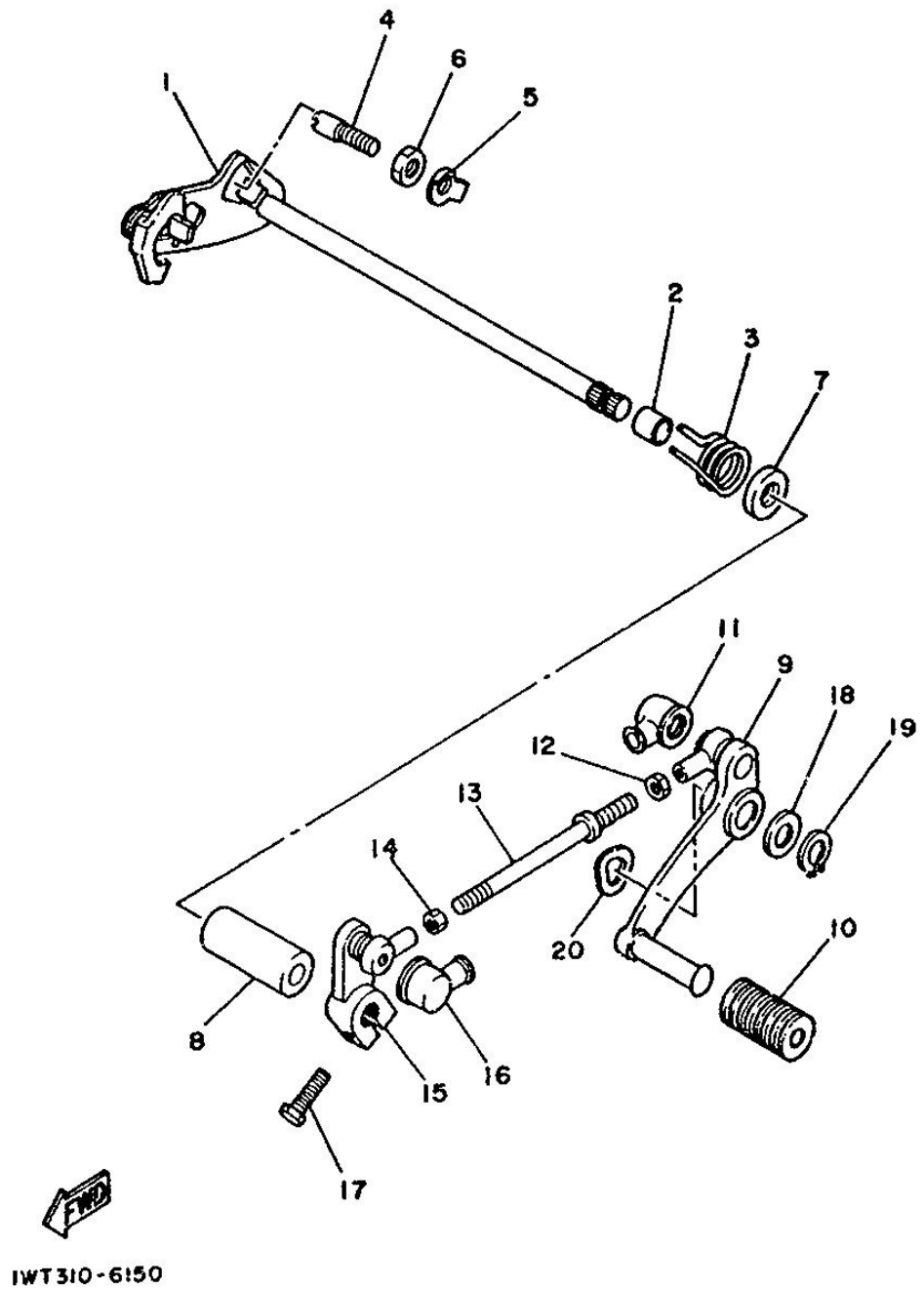

Fig. 15 SHIFT SHAFT

N° référen	Référence de la pièce	Description		Remarques
1	4L0-18101-00	SHIFT SHAFT ASSY	1	
2	90560-12171	SPACER	1	
3	90508-32374	SPRING, torsion	1	
4	90149-08094	SCREW	1	
5	90215-08174	WASHER, lock	1	
6	90170-08029	NUT	1	
7	93102-12106	OIL SEAL	1	
8	90387-125A8	COLLAR	1	
9	1UA-18111-00	PEDAL, shift	1	
10	132-18113-01	COVER, shift pedal	1	
11	2H9-18154-00	COVER, dust	1	
12	95306-06700	NUT	1	
13	1UA-18115-00	ROD, shift	1	
14	90170-06289	NUT	1	
15	1UA-18112-00	ARM, shift	1	
16	2H9-18154-00	COVER, dust	1	
17	97316-06020	BOLT	1	
18	90201-122A7	WASHER, plate	1	
19	99009-12400	CIRCLIP	1	
20	90206-12074	WASHER, wave	1	

Copyright(C) 2009 YAMAHA MOTOR CO. LTD. JAPAN All rights reserved

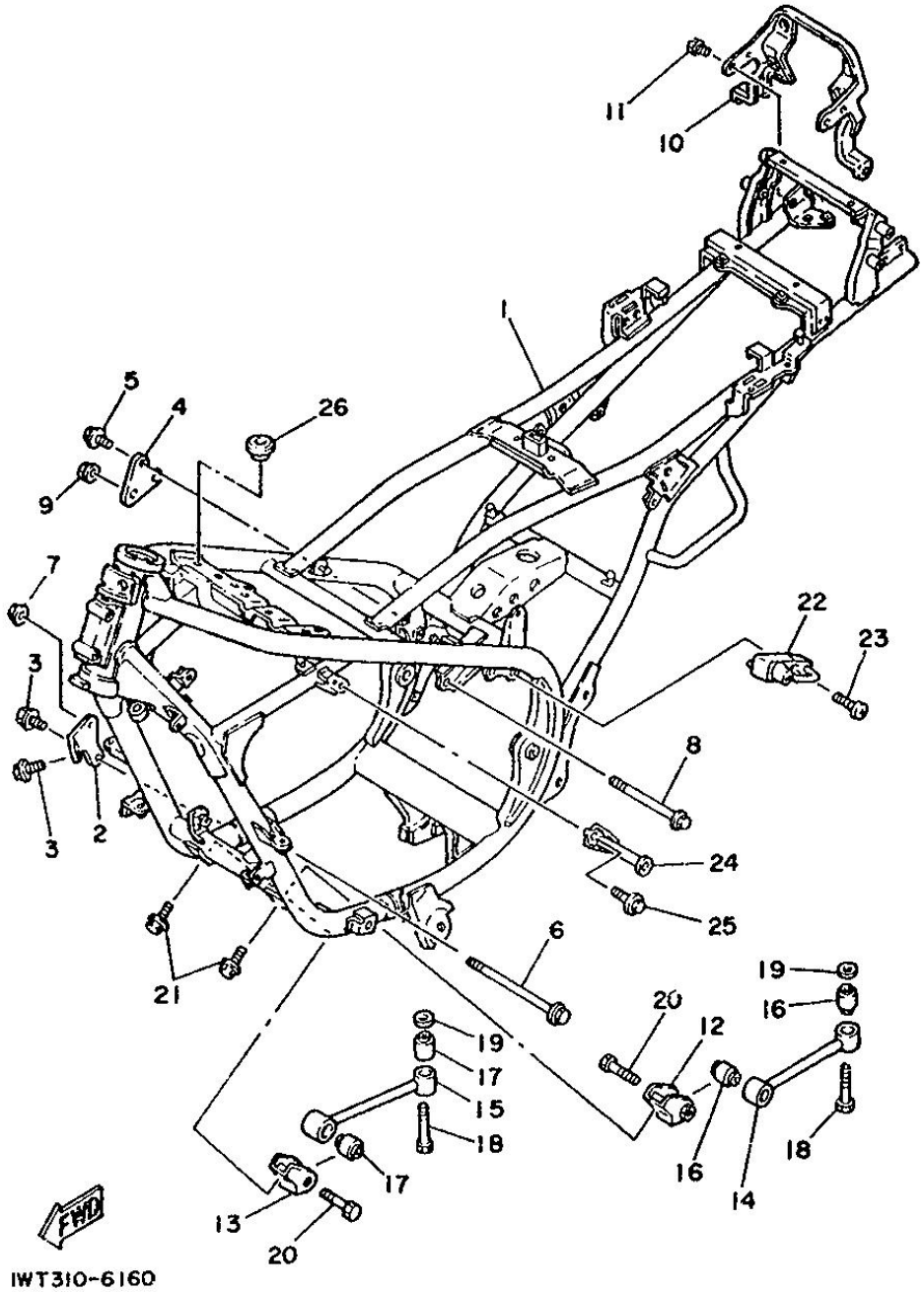

Fig. 16 FRAME

N° référen	Référence de la pièce	Description		Remarques
1	1WT-21110-00-33	FRAME COMP.	1	YAMAHA BLACK
2	29L-21315-01	STAY, engine 2	1	
3	95023-08016	BOLT, flange	2	
4	29L-21316-00	STAY, engine 3	1	
5	95023-08016	BOLT, flange	2	
6	95021-10150	BOLT, flange	1	
7	95701-10500	NUT, flange	1	
8	95021-10115	BOLT, flange	1	
9	95701-10500	NUT, flange	1	
10	1UA-21260-00	REAR FENDER BRACKET COMP.	1	
11	98002-06010	BOLT	4	
12	4L0-21317-00	STAY, engine 4	1	
13	4L0-21318-00	STAY, engine 5	1	
14	1UA-21314-00	STAY, engine 1	1	
15	1UA-21319-00	STAY, engine 6	1	
16	4L0-21485-00	DAMPER, rubber 1	2	
17	4L0-21485-00	DAMPER, rubber 1	2	
18	98001-10040	BOLT	2	
19	92990-10600	WASHER, plate	2	
20	98001-10040	BOLT	2	
21	95806-08012	BOLT, flange	2	
22	47X-21308-00	HELMET HANGER ASSY	1	
23	90149-06154	SCREW	1	
24	1WT-28359-00	STAY 2	2	
25	91006-06010	BOLT, flange	2	
26	137-24181-00	DAMPER, locating 1	1	

Copyright(C) 2009 YAMAHA MOTOR CO. LTD. JAPAN All rights reserved

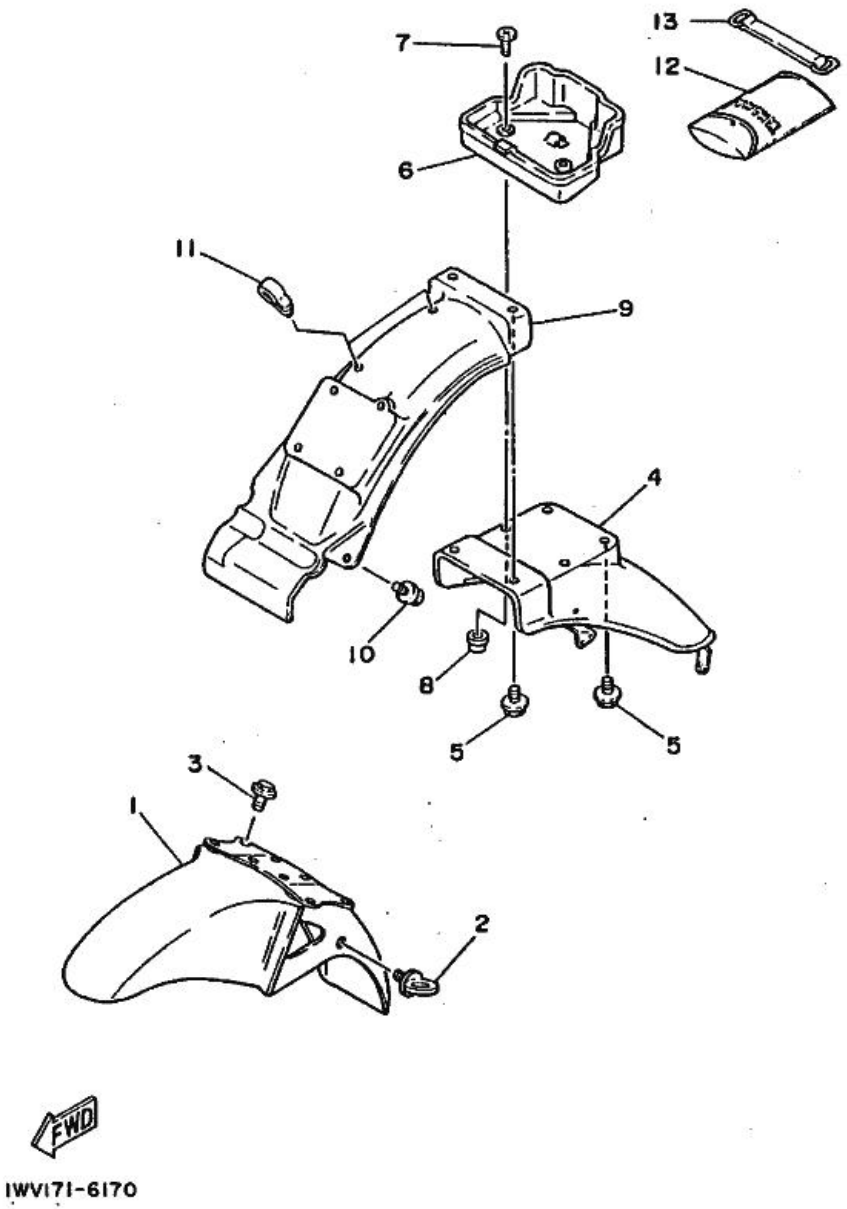

Fig. 17 FENDER

N° référen	Référence de la pièce	Description		Remarques
1	51L-21510-00-4X	FRONT FENDER COMP.	1	STORMY RED
2	1A8-21518-00	HOLDER, cable	1	
3	95023-06016	BOLT, flange	4	
4	1WV-21610-00	REAR FENDER COMP.	1	
5	90119-06044	BOLT, with washer	4	
6	1UA-21171-00	BOX, tool	1	
7	98906-05016	SCREW, bind	2	
8	90179-05523	NUT	2	
9	29L-21629-00	GUARD, mud	1	
10	90119-06095	BOLT, with washer	1	
11	90464-12027	CLAMP	2	
12	1WT-28100-00	TOOL KIT	1	
13	116-82131-00	BAND, battery	1	

Copyright(C) 2009 YAMAHA MOTOR CO. LTD. JAPAN All rights reserved

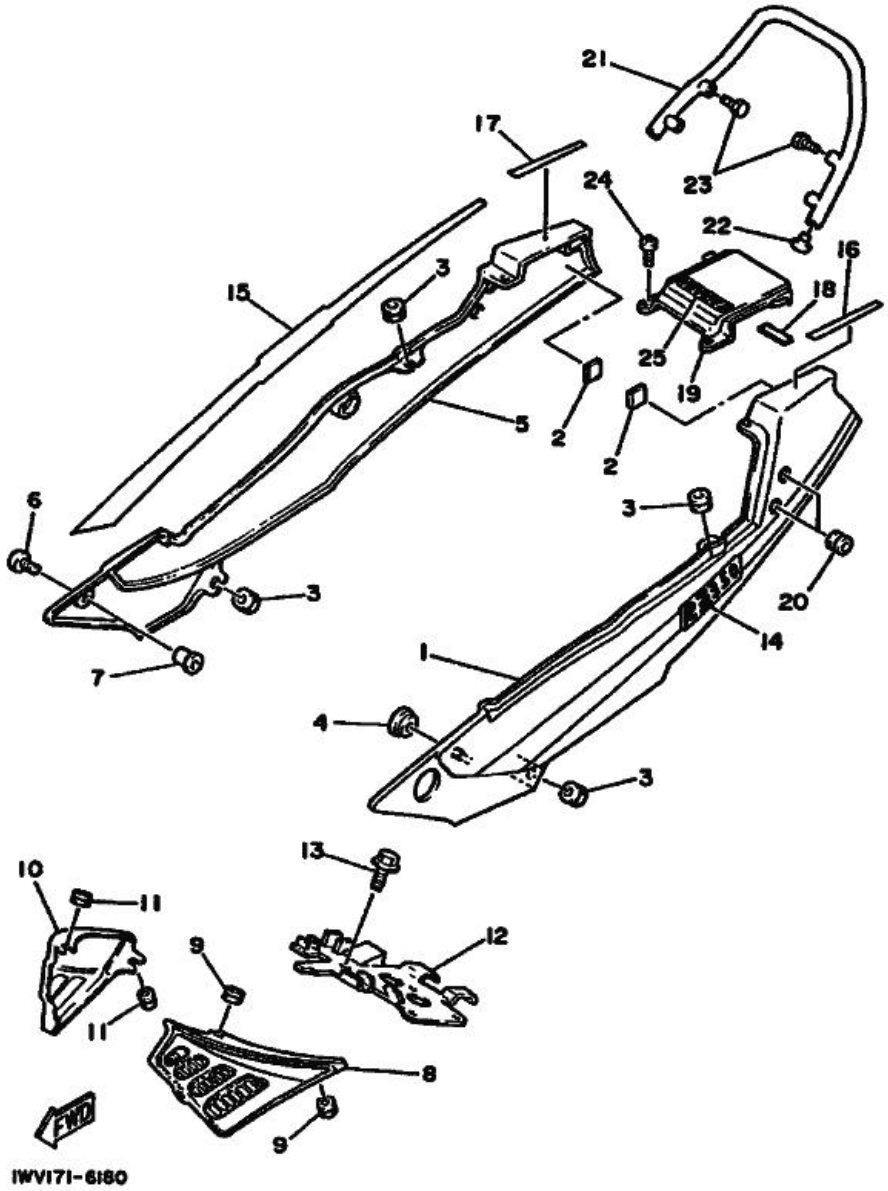

Fig. 18 SIDE COVER

N° référen	Référence de la pièce	Description		Remarques
1	1UA-21711-00-GE	COVER, side 1	1	SILKY WHITE
2	4J2-21778-00	DAMPER, locating 1	2	
3	90480-12053	GROMMET	4	
4	90480-13426	GROMMET	1	
5	1UA-21721-00-GE	COVER, side 2	1	SILKY WHITE
6	90110-06090	BOLT, hexagon socket head	1	
7	90179-06520	NUT	1	
8	29L-21731-00	COVER, side 3	1	
9	90480-12014	GROMMET	2	
10	29L-21741-00	COVER, side 4	1	
11	90480-12014	GROMMET	2	
12	1UA-21243-00	PLATE, bridge	1	
13	90119-06042	BOLT, with washer	2	
14	1WV-2173E-00	GRAPHIC 1	1	
15	1WV-2173F-00	GRAPHIC 2	1	
16	1WT-2174G-00	GRAPHIC 3	1	FOR SW
17	1WT-2174H-00	GRAPHIC 4	1	FOR SW
18	50W-2639G-00	SEAL	1	
19	1UA-21651-00-AJ	COVER, rear fender	1	STORMY RED
20	90480-19453	GROMMET	4	
21	1UA-21645-00	STAY, rear	1	
22	1J3-24742-00	GROMMET	2	
23	98006-08035	BOLT	4	
24	98906-06016	SCREW, bind	2	
25	1XG-2163G-00	EMBLEM 1	1	

Copyright(C) 2009 YAMAHA MOTOR CO. LTD. JAPAN All rights reserved

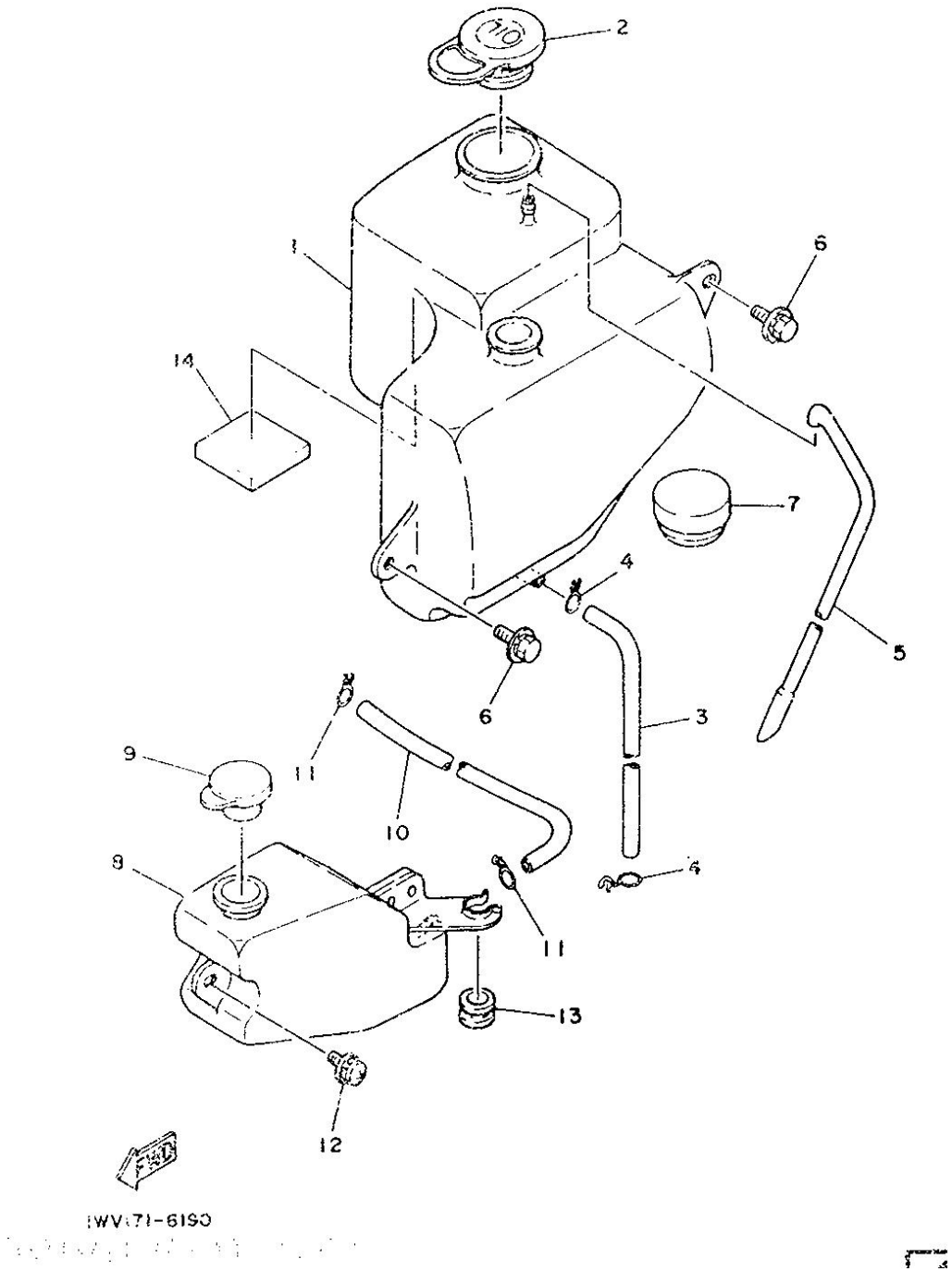

Fig. 19 OIL TANK

N° référen	Référence de la pièce	Description		Remarques
1	29L-21751-01	TANK, oil	1	
2	10V-21771-00	BODY, cap	1	
3	29L-24316-00	PIPE 6	1	
4	90467-08003	CLIP	2	
5	29L-24317-00	PIPE 7	1	
6	90119-06044	BOLT, with washer	2	
7	29L-21746-00	DAMPER	1	
8	29L-21870-00	RECOVERY TANK ASSY	1	
9	4L0-21815-01	CAP	1	
10	29L-21766-00	PIPE, oil	1	
11	90467-10008	CLIP	2	
12	90159-06060	SCREW, with washer	1	
13	90480-12014	GROMMET	1	
14	2X6-24183-00	DAMPER	1	

Copyright(C) 2009 YAMAHA MOTOR CO. LTD. JAPAN All rights reserved

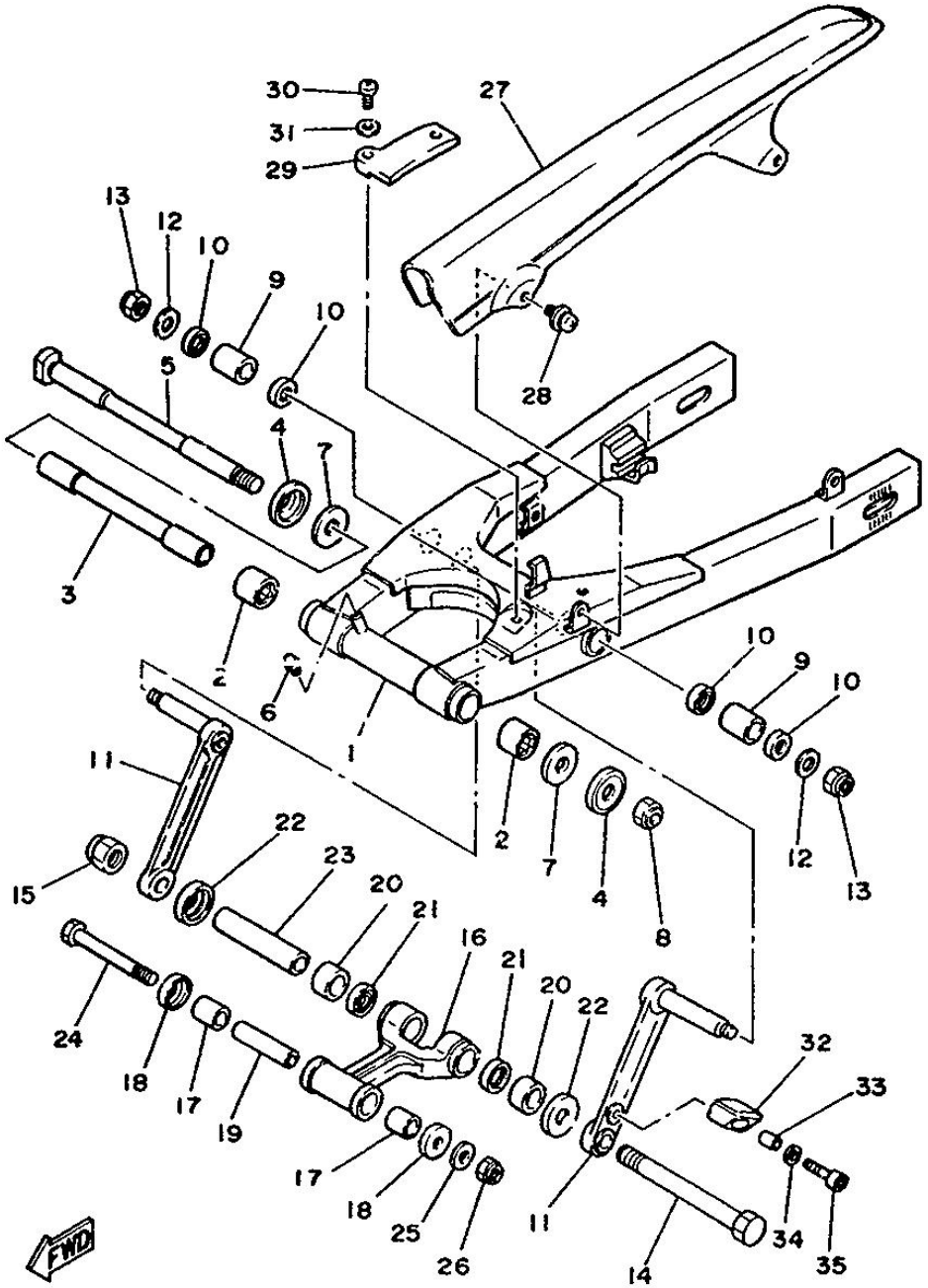

Fig. 20 REAR ARM

N° référen	Référence de la pièce	Description		Remarques
1	51L-22110-00-35	REAR ARM COMP.	1	SILVER
2	93320-32403	BEARING	2	
3	51L-22184-00	BUSH	1	
4	4X7-22129-00	COVER, thrust 2	2	
5	29L-22141-00	SHAFT, pivot	1	
6	93700-06004	NIPPLE, grease	1	
7	90201-161J3	WASHER, plate	2	
8	90185-14070	NUT, self-locking	1	
9	90386-18136	BUSH	2	
10	93109-18020	OIL SEAL	4	
11	31K-2217M-00	ARM 1	2	
12	90201-12191	WASHER, plate	2	
13	95601-12100	NUT, u	2	
14	90101-14654	BOLT	1	
15	90185-14137	NUT, self-locking	1	
16	31K-2217A-00	ARM, relay	1	
17	90386-18118	BUSH	2	
18	26H-22129-00	COVER, thrust 2	2	
19	90387-127H2	COLLAR	1	
20	90386-20134	BUSH	2	
21	93109-20029	OIL SEAL	2	
22	26H-22128-00	COVER, thrust 1	2	
23	90387-144H4	COLLAR	1	
24	90109-10739	BOLT	1	
25	90201-10126	WASHER, plate	1	
26	95602-10100	NUT, u	1	
27	29L-22311-00	CASE, chain	1	

Copyright(C) 2009 YAMAHA MOTOR CO. LTD. JAPAN All rights reserved

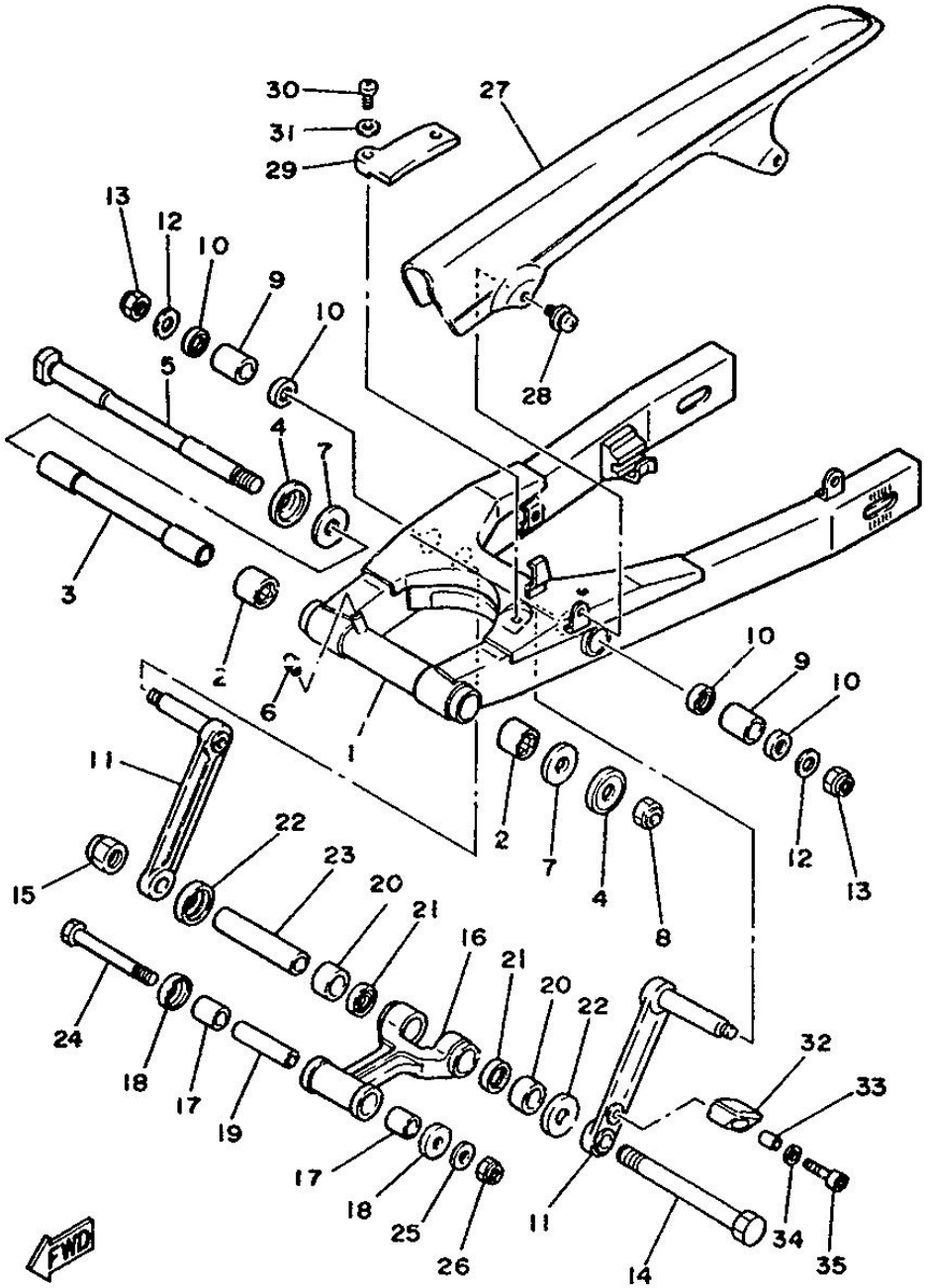

Fig. 20 REAR ARM

N° référen	Référence de la pièce	Description		Remarques
28	90159-06084	SCREW, with washer	2	
29	29L-22151-00	SEAL, guard	1	
30	98501-05010	SCREW, pan head	2	
31	92901-05600	WASHER, plate	2	
32	31K-22187-00	GUIDE, chain	1	
33	90387-060G5	COLLAR	1	
34	92901-06200	WASHER, plain	1	
35	91311-06030	BOLT	1	

Copyright(C) 2009 YAMAHA MOTOR CO. LTD. JAPAN All rights reserved

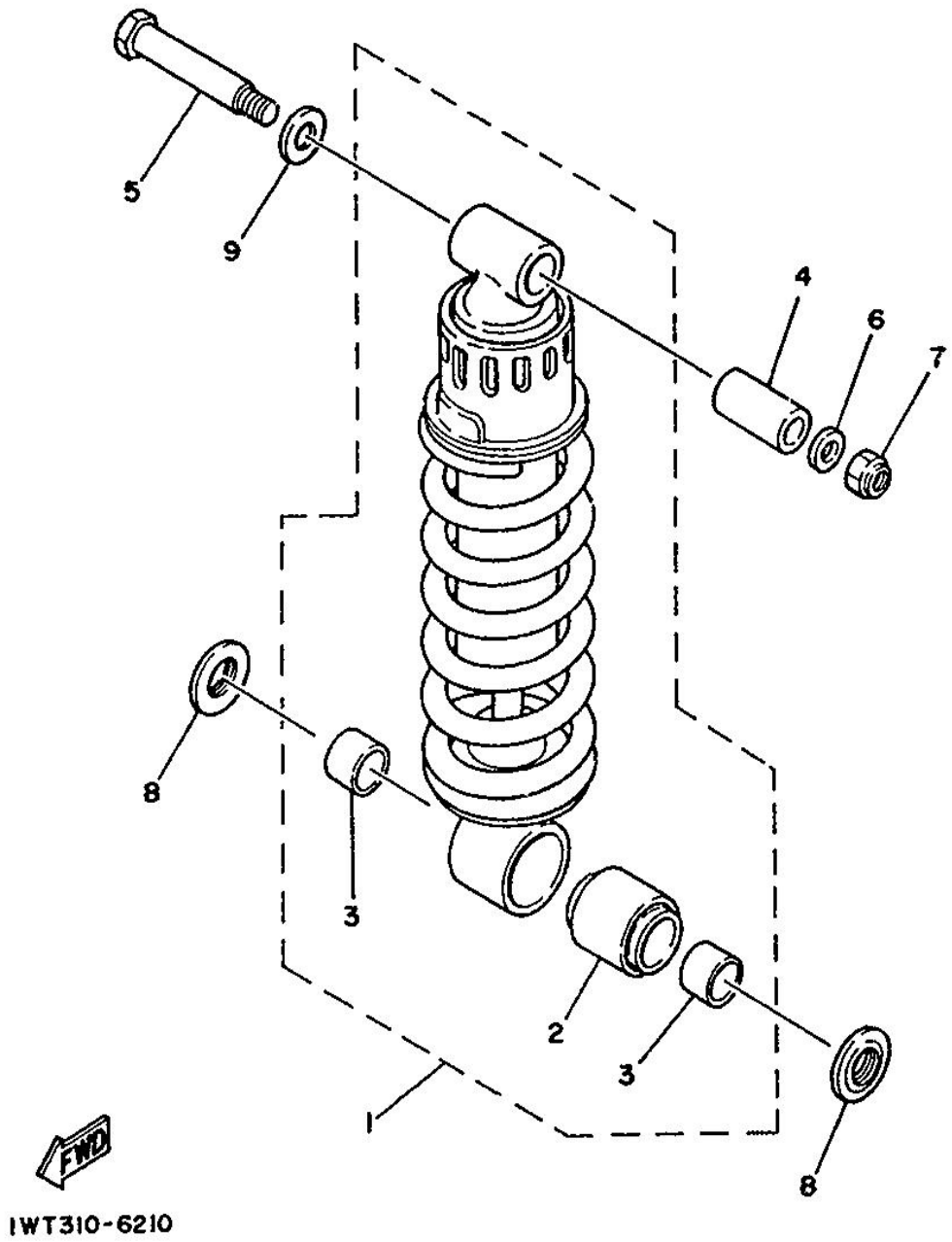

Fig. 21 REAR SUSPENSION

N° référen	Référence de la pièce	Description		Remarques
1	1UA-22210-00	SHOCK ABSORBER ASSY, rear	1	
2	29L-22216-00	.BUSH, rear shock absorber	1	
3	90380-20123	.BUSH, solid	2	
4	90387-106H5	COLLAR	1	
5	90109-10554	BOLT	1	
6	90201-10126	WASHER, plate	1	
7	95602-10100	NUT, u	1	
8	29L-2217H-00	COVER, dust	2	
9	90201-12729	WASHER, plate	1	

Copyright(C) 2009 YAMAHA MOTOR CO. LTD. JAPAN All rights reserved

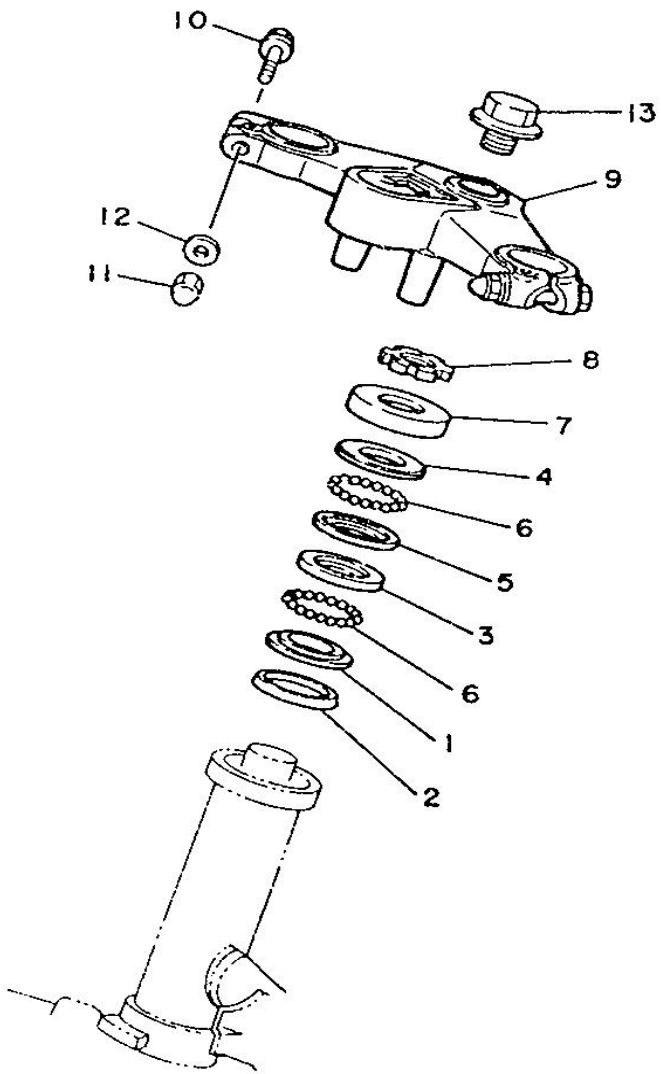

iWT310-6220

Fig. 22 STEERING

N° référen	Référence de la pièce	Description		Remarques
1	156-23411-00	RACE, ball 1	1	
2	164-23462-00	SEAL, steering	1	
3	156-23412-00	RACE, ball 2	1	
4	183-23411-00	RACE, ball 1	1	
5	183-23412-00	RACE, ball 2	1	
6	93501-04011	BALL	38	
7	4K0-23415-00	COVER, ball race 1	1	
8	90179-25495	NUT	1	
9	1UA-23435-00-98	CROWN, handle	1	LOW GLOSS BLACK
10	91026-08050	BOLT, flange	2	
11	95306-08800	NUT	2	
12	92906-08600	WASHER, plate	2	
13	90105-14365	BOLT, washer based	1	

Copyright(C) 2009 YAMAHA MOTOR CO. LTD. JAPAN All rights reserved

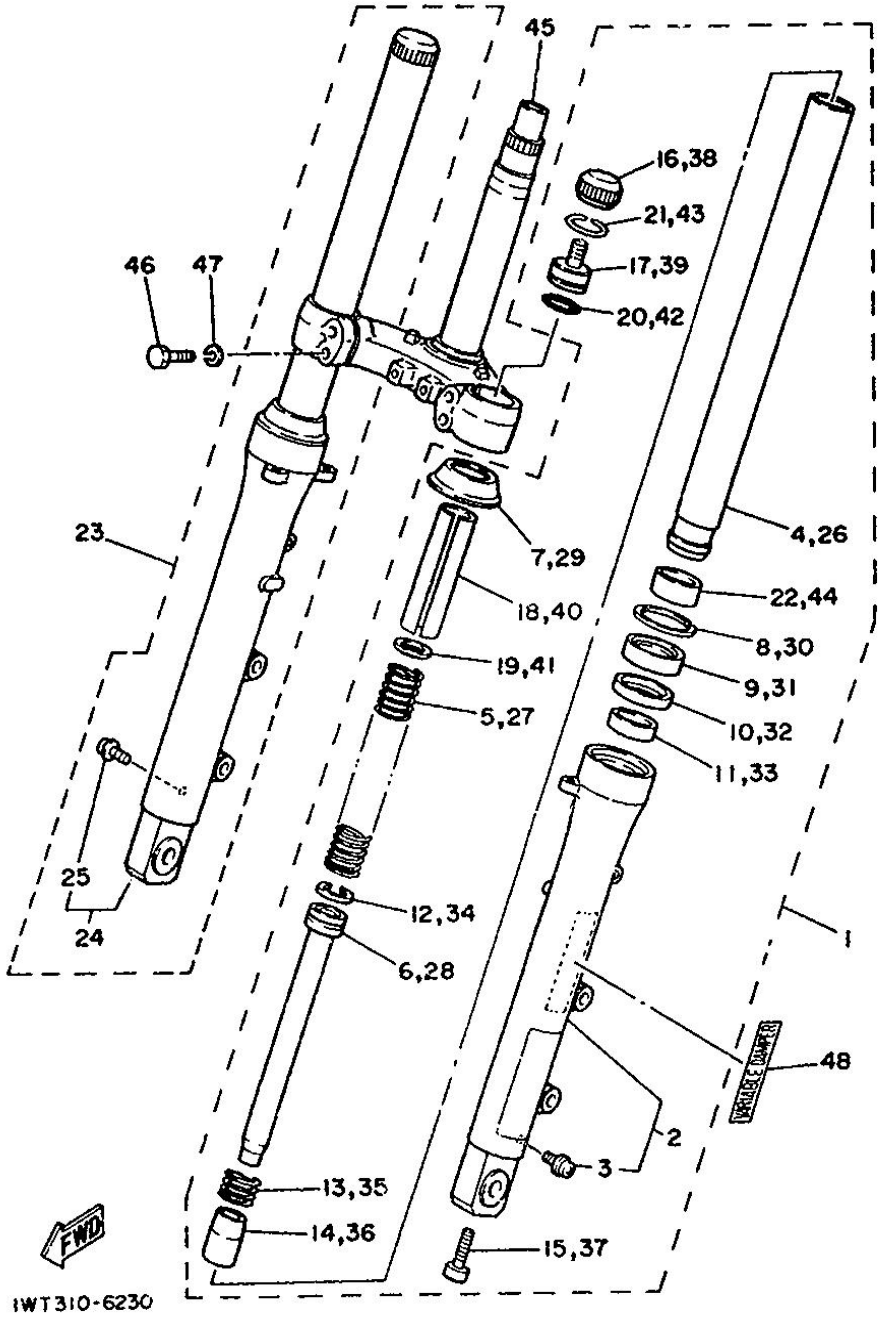

Fig. 23 FRONT FORK

N° référen	Référence de la pièce	Description		Remarques
1	1UA-23102-00	FRONT FORK ASSY (L.H)	1	
2	51L-23126-00-38	.TUBE, outer 1	1	CLEAR BUFFING
3	1E7-23119-00	..PLUG, drain	1	
4	1UA-23110-00	.INNER TUBE COMP. 1	1	
5	1UA-23141-00	.SPRING, frontt fork	1	
6	1UA-23171-00	.PISTON, front fork	1	
7	1UA-23144-00	.SEAL, dust	1	
8	34X-23156-00	.CLIP, oil seal	1	
9	1UA-23145-00	.OIL SEAL	1	
10	10V-23147-00	.O-RING	1	
11	51L-23125-00	.METAL, slide 1	1	
12	51L-23157-00	.RING, piston	1	
13	51L-23151-00	.SPRING, rebound	1	
14	10V-23166-00	.SPACER, oil lock	1	
15	3M7-23181-00	.BOLT, hexagon socket head	1	
16	1UA-23168-00	.CAP, front fork	1	
17	1UA-23111-00	.BOLT, cap	1	
18	51L-23118-00	.SPACER	1	
19	51L-23142-00	.SEAT, spring upper	1	
20	1UA-23147-00	.O-RING	1	
21	1UA-23153-00	.RING, snap	1	
22	10V-23135-00	.METAL, slide 2	1	
23	1UA-23103-00	FRONT FORK ASSY (R.H)	1	
24	51L-23136-00-38	.TUBE, outer 2	1	CLEAR BUFFING
25	1E7-23119-00	..PLUG, drain	1	
26	1UA-23110-00	.INNER TUBE COMP. 1	1	
27	1UA-23141-00	.SPRING, front fork	1	

Copyright(C) 2009 YAMAHA MOTOR CO. LTD. JAPAN All rights reserved

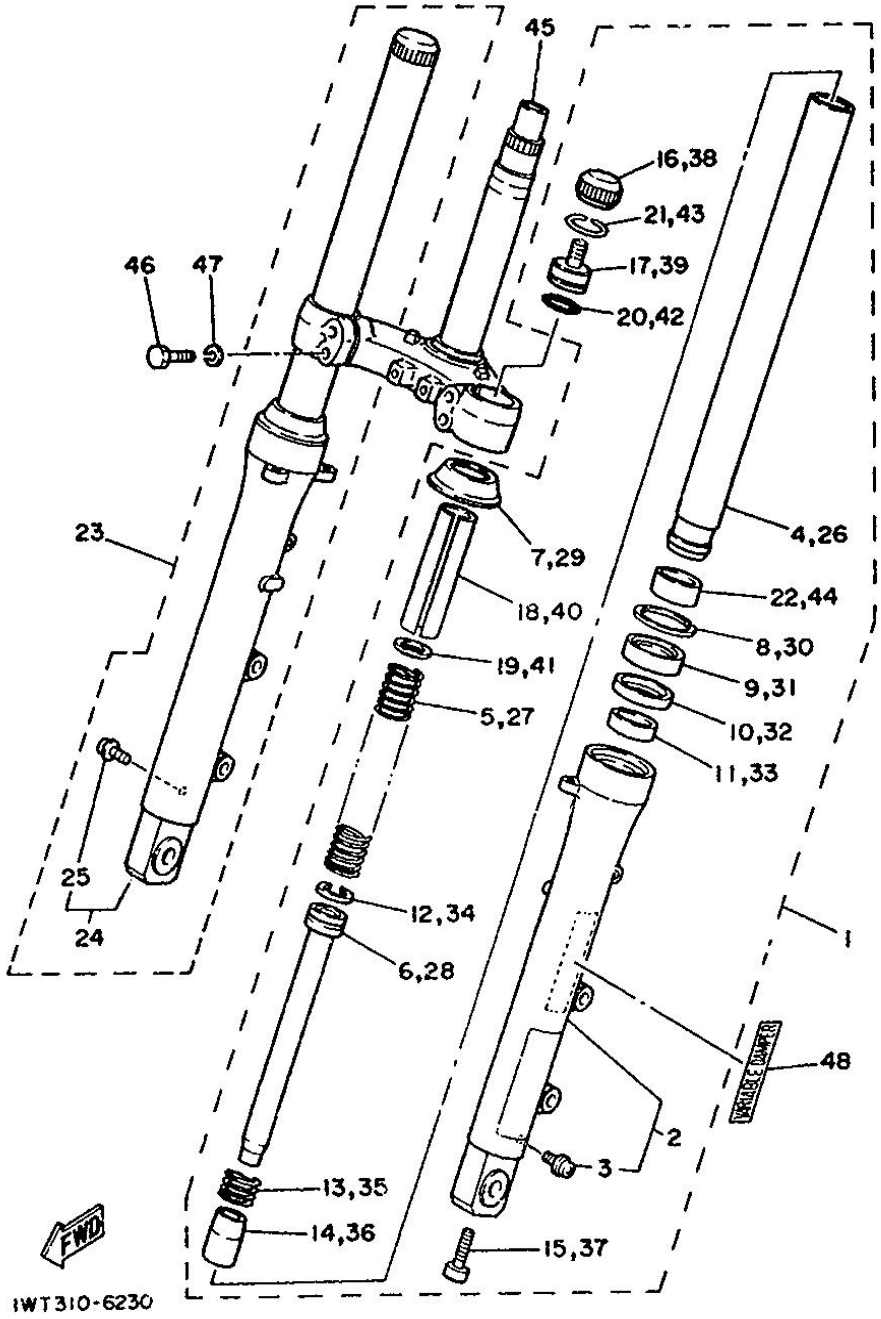

Fig. 23 FRONT FORK

N° référen	Référence de la pièce	Description		Remarques
28	1UA-23171-00	.PISTON, front fork	1	
29	1UA-23144-00	.SEAL, dust	1	
30	34X-23156-00	.CLIP, oil seal	1	
31	1UA-23145-00	.OIL SEAL	1	
32	10V-23147-00	.O-RING	1	
33	51L-23125-00	.METAL, slide 1	1	
34	51L-23157-00	.RING, piston	1	
35	51L-23151-00	.SPRING, rebound	1	
36	10V-23166-00	.SPACER, oil lock	1	
37	3M7-23181-00	.BOLT, hexagon socket head	1	
38	1UA-23168-00	.CAP, front fork	1	
39	1UA-23111-00	.BOLT, cap	1	
40	51L-23118-00	.SPACER	1	
41	51L-23142-00	.SEAT, spring upper	1	
42	1UA-23147-00	.O-RING	1	
43	1UA-23153-00	.RING, snap	1	
44	10V-23135-00	.METAL, slide 2	1	
45	31K-23340-30	UNDER BRACKET COMP.	1	
46	90101-08592	BOLT	4	
47	3J3-23159-00	WASHER, spring, lower	4	
48	51L-23108-00	EMBLEM	2	

Copyright(C) 2009 YAMAHA MOTOR CO. LTD. JAPAN All rights reserved

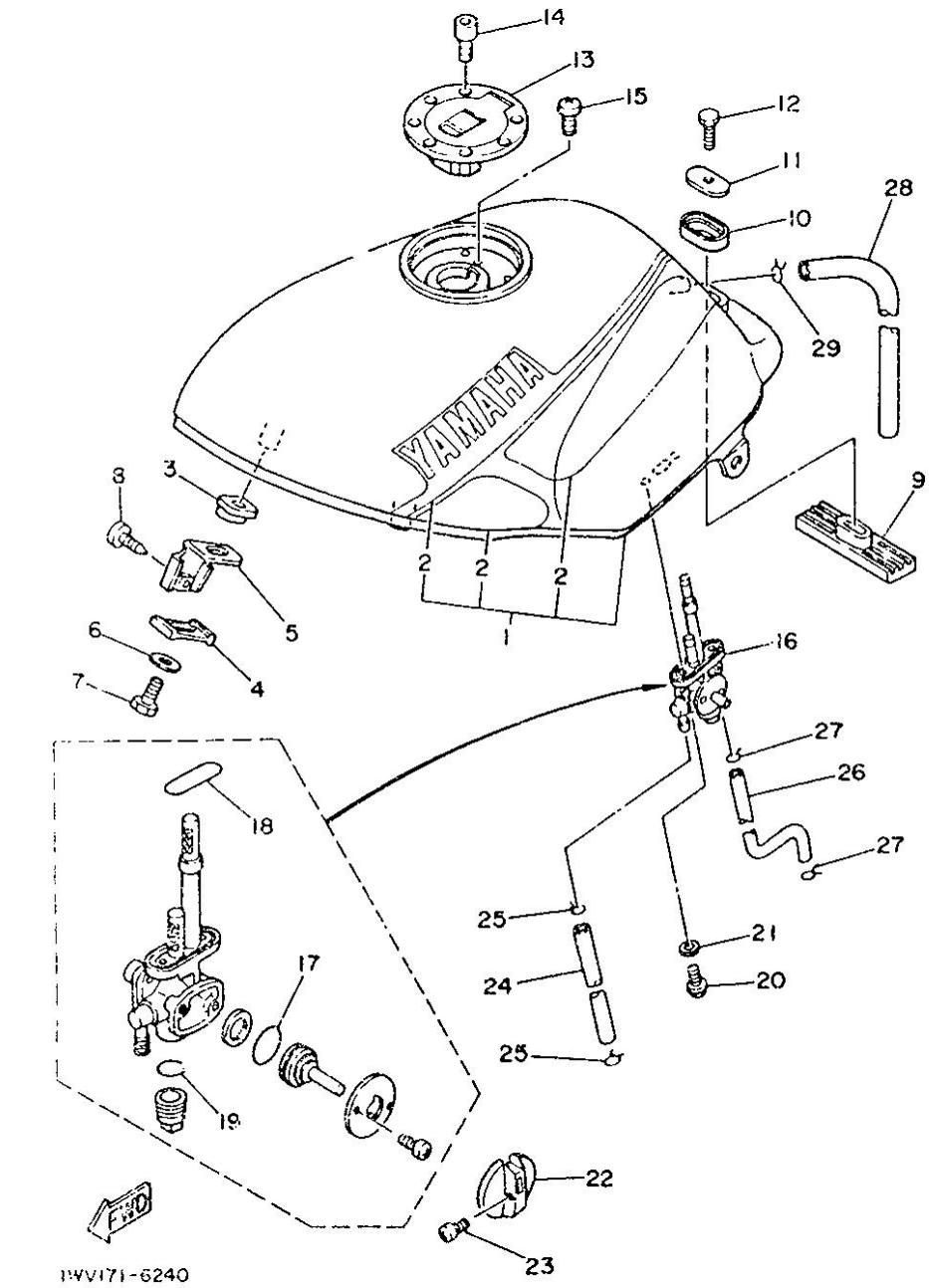

Fig. 24 FUEL TANK

N° référen	Référence de la pièce	Description		Remarques
1	1UA-24110-00-01	FUEL TANK COMP.	1	SILKY WHITE/STORMY RED
2	1WT-24240-00	.GRAPHIC SET	1	FOR SW/SMR
3	1A0-24181-00	DAMPER, locating 1	2	
4	1A0-24186-00	WASHER, special	2	
5	1UA-24191-00	BRACKET, fuel tank 1	2	
6	90209-06186	WASHER	2	
7	98006-06008	BOLT	2	
8	90157-06046	SCREW, pan head	2	
9	29L-24182-00	DAMPER, locating 2	1	
10	3Y6-24183-00	DAMPER, locating 3	1	
11	12R-24186-00	WASHER, special	1	
12	98002-08030	BOLT	1	
13	1TX-24602-00	CAP ASSY	1	
14	90110-05112	BOLT, hexagon socket head	3	
15	98501-05010	SCREW, pan head	1	
16	1UA-24500-00	FUEL COCK ASSY 1	1	
17	3H3-24534-00	.O-RING	1	
18	2W6-24512-00	.O-RING	1	
19	4X8-24565-00	.GASKET	1	
20	90149-06011	SCREW	2	
21	90202-06010	WASHER, plate	2	
22	46X-24524-00	LEVER, cock	1	
23	98506-03008	SCREW, pan head	1	
24	1UA-24311-00	PIPE, fuel 1	1	
25	90467-10041	CLIP	2	
26	29L-2416A-00	HOSE	1	
27	90467-08075	CLIP	2	

Copyright(C) 2009 YAMAHA MOTOR CO. LTD. JAPAN All rights reserved

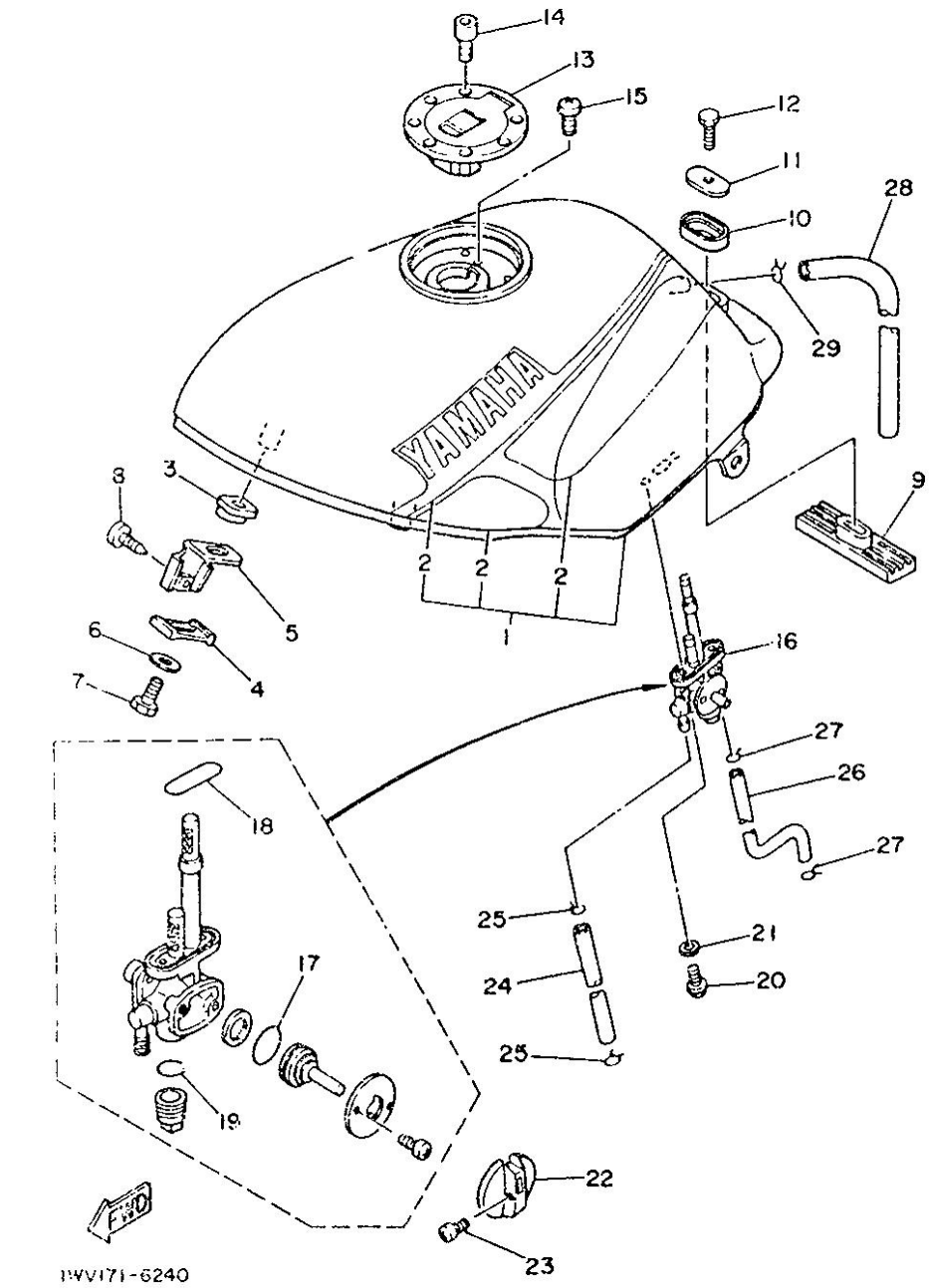

Fig. 24 FUEL TANK

N° référen	Référence de la pièce	Description		Remarques
28	1JK-24315-00	PIPE 5	1	
29	90467-09006	CLIP	1	

Copyright(C) 2009 YAMAHA MOTOR CO. LTD. JAPAN All rights reserved

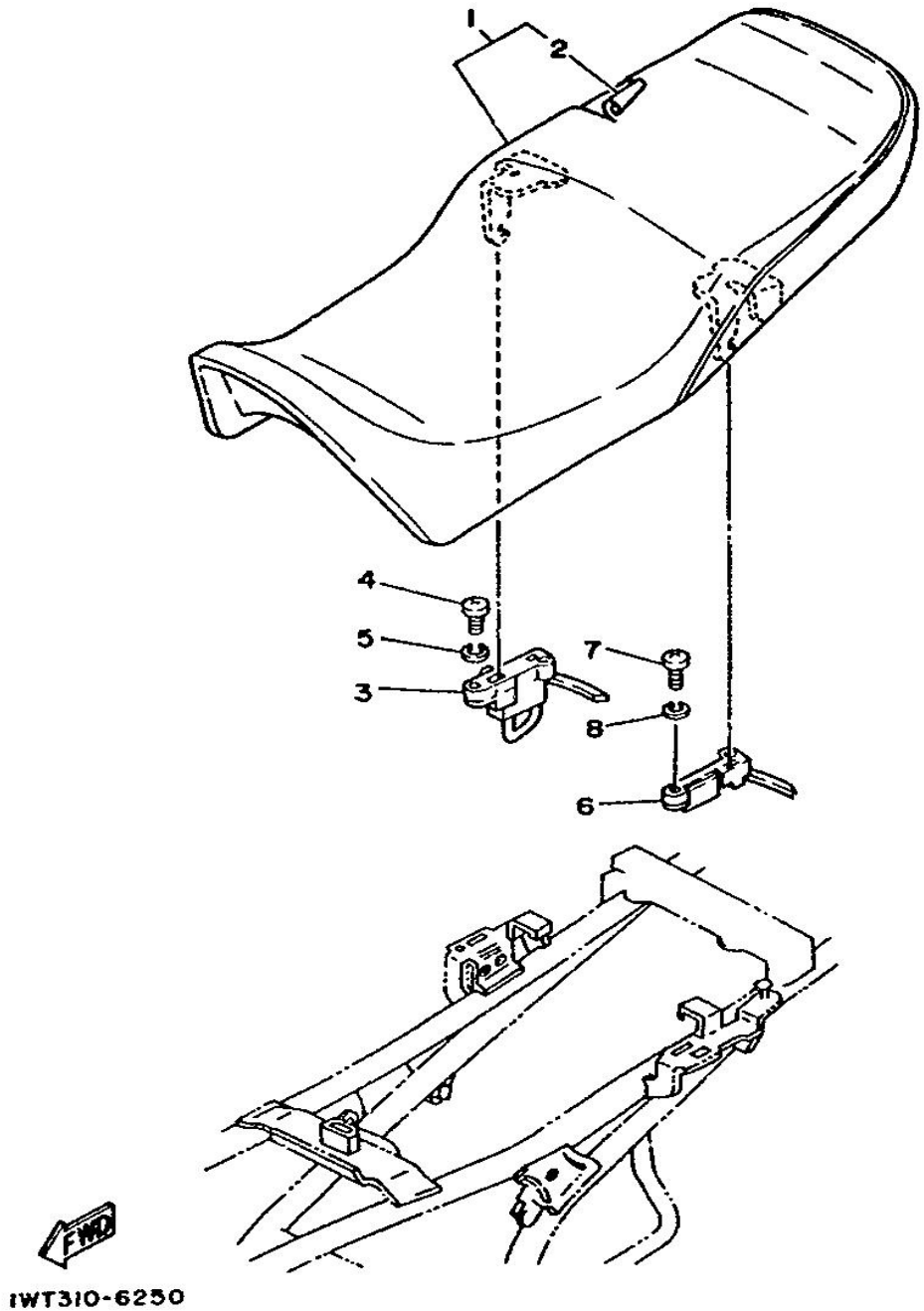

Fig. 25 SEAT

N° référen	Référence de la pièce	Description		Remarques
1	1UA-24730-00	DOUBLE SEAT ASSY	1	BLACK
2	1UA-24731-00	.COVER, seat	1	BLACK
3	41Y-24705-01	SEAT LOCK ASSY	1	
4	92502-06016	SCREW, pan head	2	
5	92990-06100	WASHER, spring	2	
6	31A-24760-00	SEAT LEVER ASSY	1	
7	92502-06016	SCREW, pan head	2	
8	92990-06100	WASHER, spring	2	

Copyright(C) 2009 YAMAHA MOTOR CO. LTD. JAPAN All rights reserved

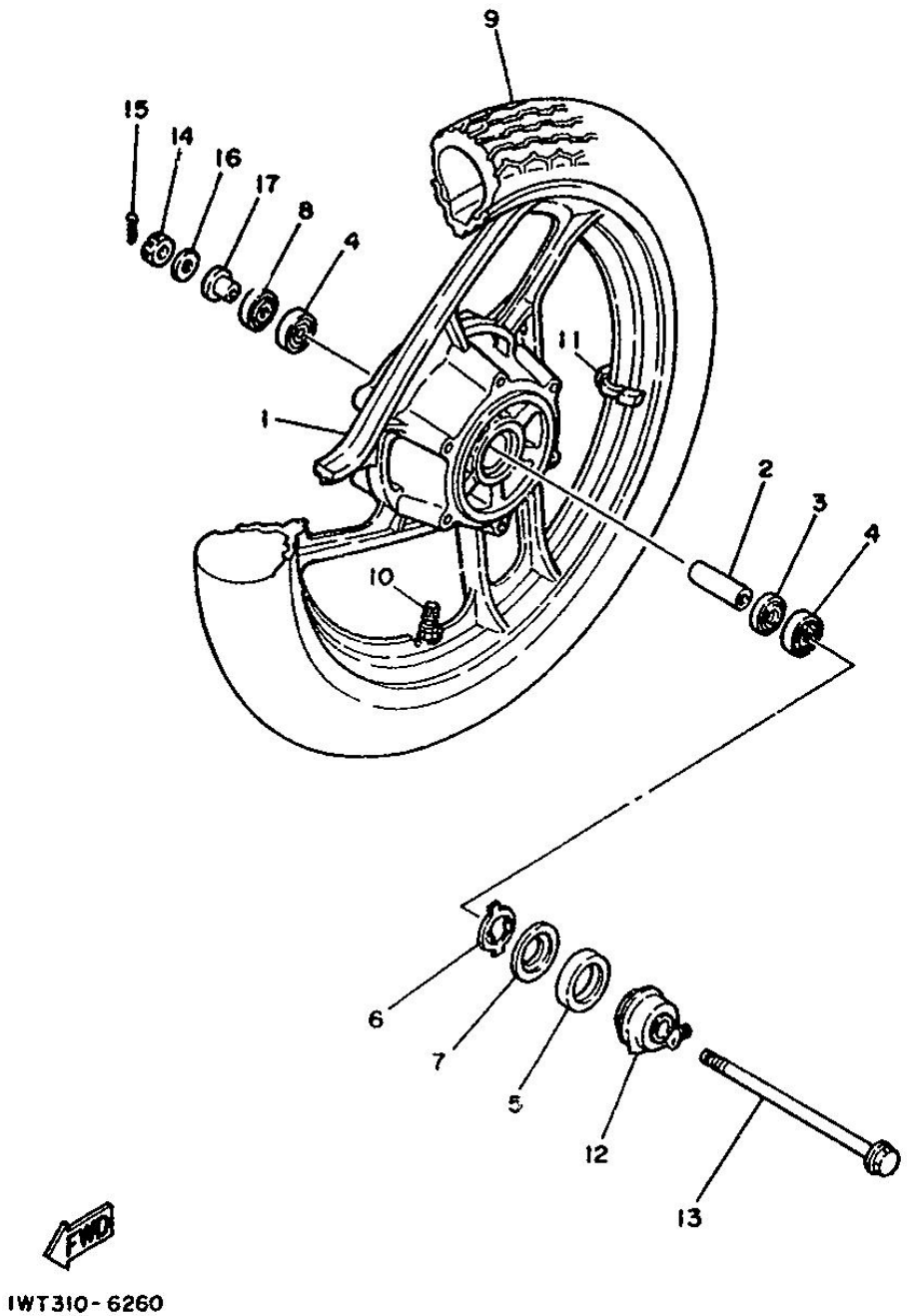

Fig. 26 FRONT WHEEL

N° référen	Référence de la pièce	Description		Remarques
1	1UA-25168-00-FH	CAST WHEEL, front	1	FIRE RED
2	90387-123A9	COLLAR	1	
3	2U2-25315-00	FLANGE, spacer	1	
4	93306-30109	BEARING	2	
5	93105-45017	OIL SEAL	1	
6	341-25149-00	CLUTCH, meter	1	
7	341-25846-00	RETAINER, clutch	1	
8	93106-20002	OIL SEAL	1	
9	94109-187J7	TIRE (90/90 51H F202)	1	UR YOKOHAMA
	94109-184J2	TIRE (90/90 51H K300M)	1	UR DUNLOP
10	93900-00018	VALVE, rim	1	UR YOKOHAMA
	93900-00015	VALVE, rim	1	UR DUNLOP
11	29L-25398-00	BALANCER, wheel (10G)	1	UN
	29L-25398-10	BALANCER, wheel (20G)	1	UN
	29L-25398-20	BALANCER, wheel (30G)	1	UN
12	4L0-25190-00	GEAR UNIT ASSY	1	
13	4L0-25181-00	AXLE, wheel	1	
14	90171-12005	NUT, castle	1	
15	91401-30025	PIN, cotter	1	
16	92901-12200	WASHER, plain	1	
17	90387-12670	COLLAR	1	

Copyright(C) 2009 YAMAHA MOTOR CO. LTD. JAPAN All rights reserved

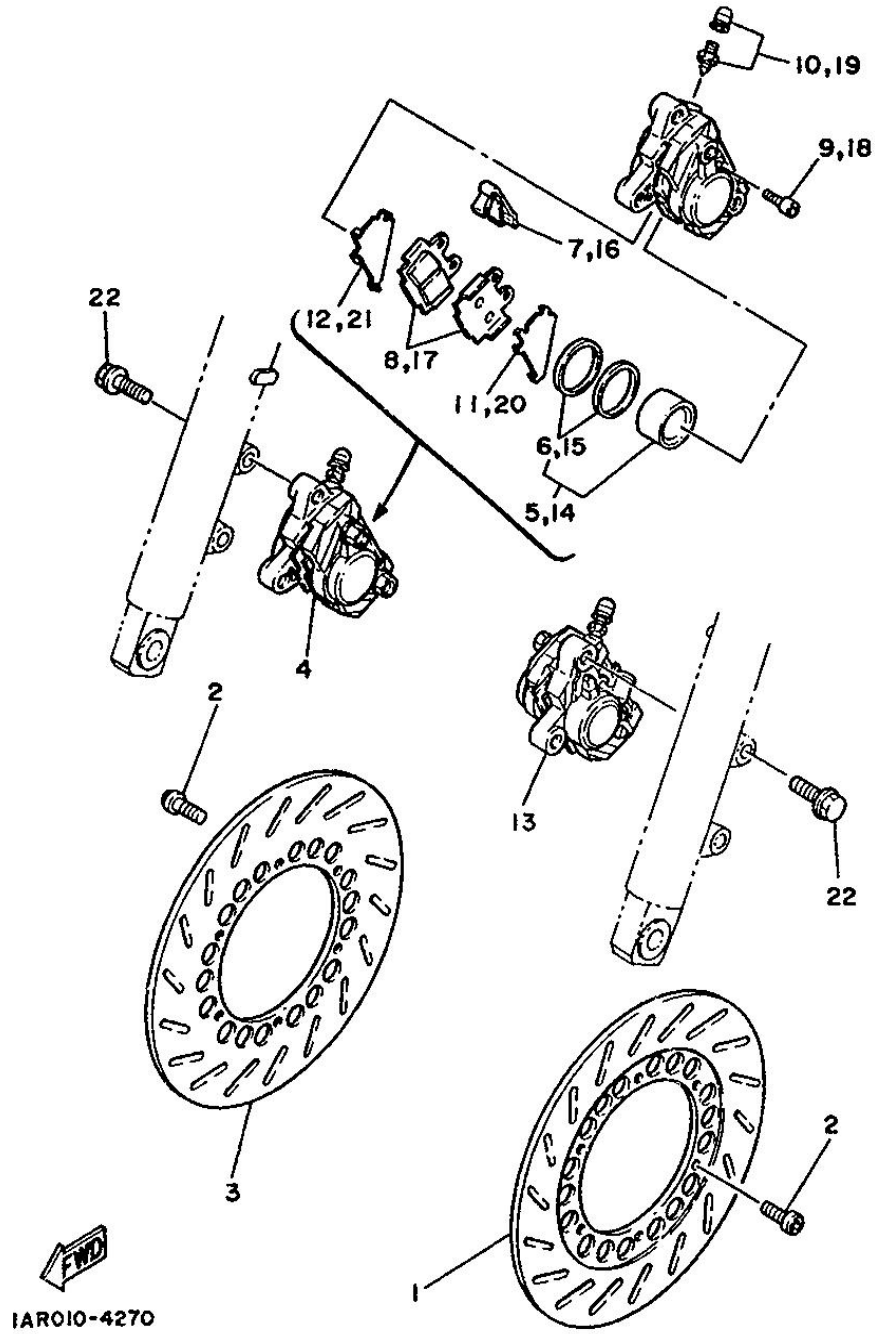

Fig. 27 FRONT BRAKE CALIPER

N° référen	Référence de la pièce	Description		Remarques
1	1UA-25831-10-33	DISC, brake (LEFT)	1	YAMAHA BLACK
2	90149-08230	SCREW	12	
3	1UA-25831-00-33	DISC, brake (RIGHT)	1	YAMAHA BLACK
4	51L-25810-01	CALIPER ASSY (RIGHT)	1	
5	51L-W0057-00	.PISTON ASSY, caliper	1	
6	51L-W0047-00	..CALIPER SEAL KIT	1	
7	51L-25919-00	.SUPPORT, pad	1	
8	51L-W0046-01	.BRAKE PAD KIT, rear	1	
9	51L-25924-00	.PIN, pad	2	
10	51L-W0048-00	.BREED SCREW KIT	1	
11	51L-25827-00	.SHIM, caliper	1	
12	51L-25827-10	.SHIM, caliper	1	
13	51L-25810-11	CALIPER ASSY (LEFT)	1	
14	51L-W0057-00	.PISTON ASSY, caliper	1	
15	51L-W0047-00	..CALIPER SEAL KIT	1	
16	51L-25919-00	.SUPPORT, pad	1	
17	51L-W0046-01	.BRAKE PAD KIT, rear	1	
18	51L-25924-00	.PIN, pad	2	
19	51L-W0048-00	.BREED SCREW KIT	1	
20	51L-25827-00	.SHIM, caliper	1	
21	51L-25827-10	.SHIM, caliper	1	
22	90105-10308	BOLT, washer based	4	

Copyright(C) 2009 YAMAHA MOTOR CO. LTD. JAPAN All rights reserved

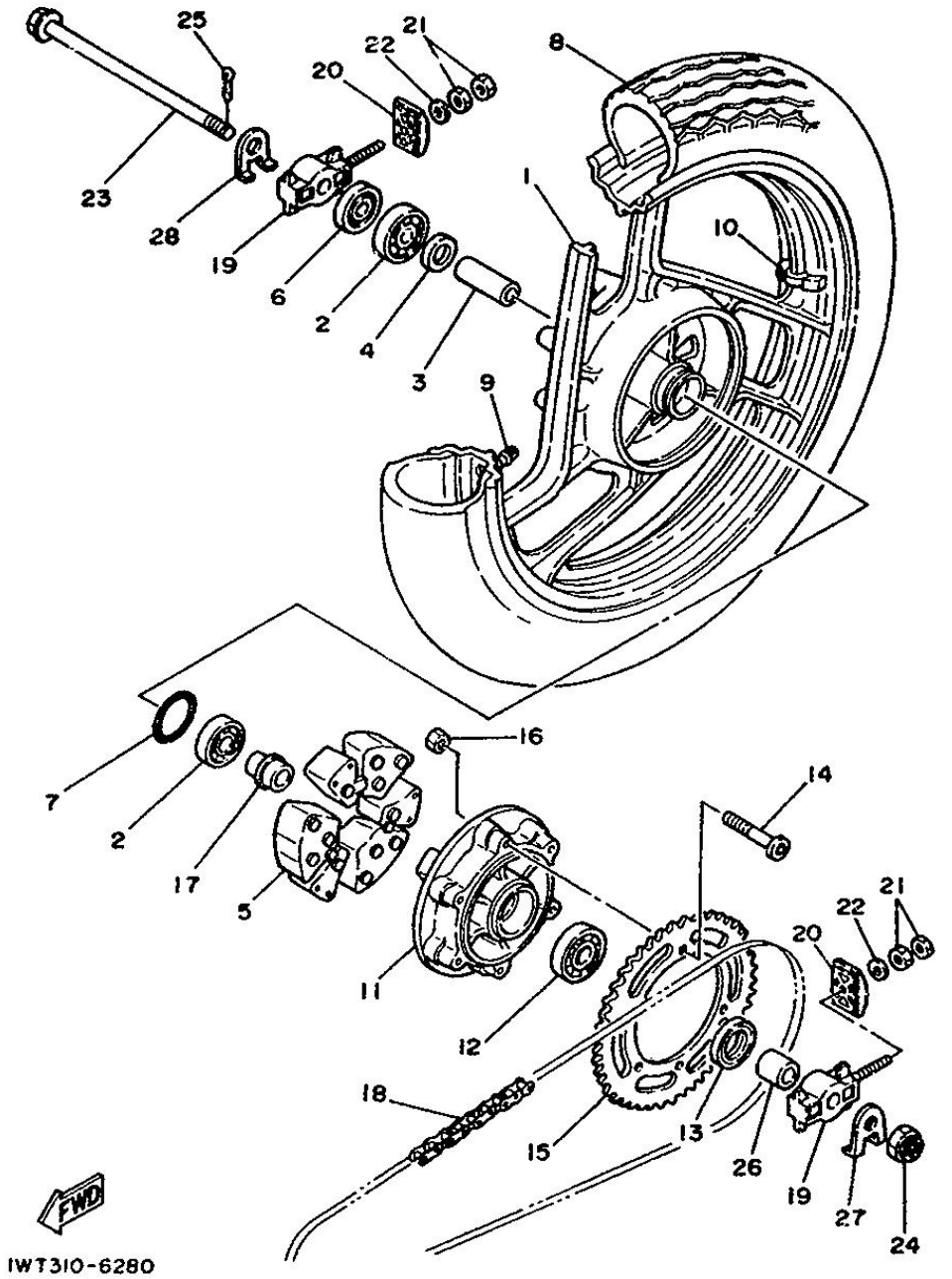

Fig. 28 REAR WHEEL

N° référen	Référence de la pièce	Description		Remarques
1	1UA-25338-20-FH	CAST WHEEL, rear	1	FIRE RED
2	93306-30206	BEARING (B6302ZZ)	2	
3	90387-154A0	COLLAR	1	
4	2R6-25115-00	FLANGE, spacer 1	1	
5	29L-25364-00	DAMPER	3	
6	93102-22014	OIL SEAL	1	
7	93210-48530	O-RING	1	
8	94111-187M4	TIRE (110/80 58H R202)	1	UR YOKOHAMA
	94111-184J3	TIRE (110/80 58H K300)	1	UR DUNLOP
9	93900-00018	VALVE, rim	1	UR YOKOHAMA
	93900-00015	VALVE, rim	1	UR DUNLOP
10	29L-25398-00	BALANCER, wheel (10G)	1	UN
	29L-25398-10	BALANCER, wheel (20G)	1	UN
	29L-25398-20	BALANCER, wheel (30G)	1	UN
11	29L-25366-00	CLUTCH, hub	1	
12	93306-30416	BEARING (B6304RS)	1	
13	93102-32298	OIL SEAL	1	
14	90110-08057	BOLT, hexagon socket head	6	
15	31K-25439-20-33	SPROCKET, driven (39T)	1	YAMAHA BLACK
16	90185-08113	NUT, self-locking	6	
17	4L0-25377-00	COLLAR, wheel	1	
18	94580-93106	CHAIN	1	
19	51L-25388-00	PULLER, chain 1	2	
20	51L-22174-00	END 1	2	
21	95301-08600	NUT	4	
22	92901-08600	WASHER, plate	2	
23	51L-25381-01	AXLE, wheel	1	

Copyright(C) 2009 YAMAHA MOTOR CO. LTD. JAPAN All rights reserved

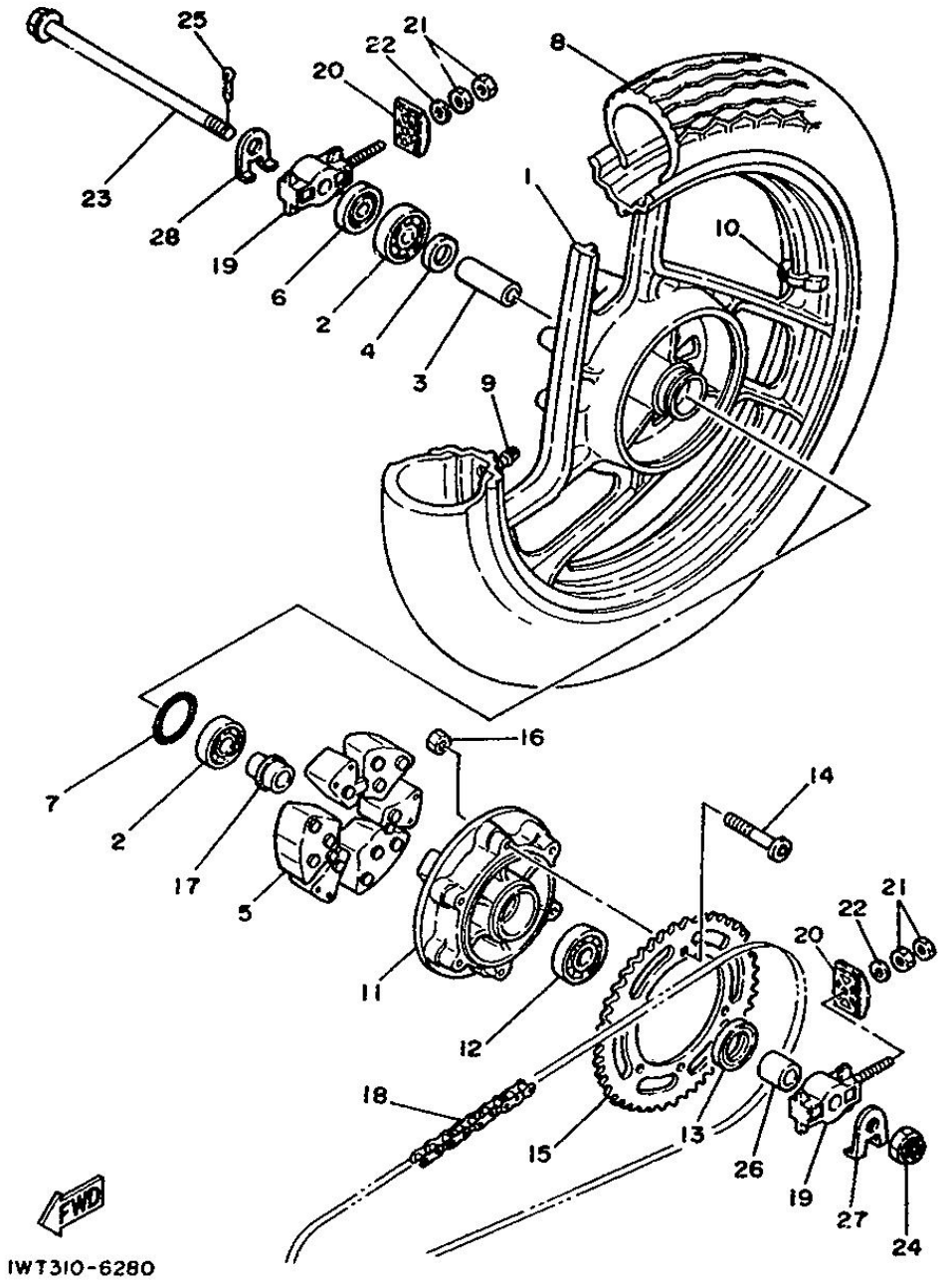

Fig. 28 REAR WHEEL

N° référen	Référence de la pièce	Description		Remarques
24	90171-14020	NUT, castle	1	
25	91401-30030	PIN, cotter	1	
26	90387-156L5	COLLAR	1	
27	51L-2533A-00	PLATE, indicator	1	
28	51L-2533E-00	PLATE, indicator 2	1	

Copyright(C) 2009 YAMAHA MOTOR CO. LTD. JAPAN All rights reserved

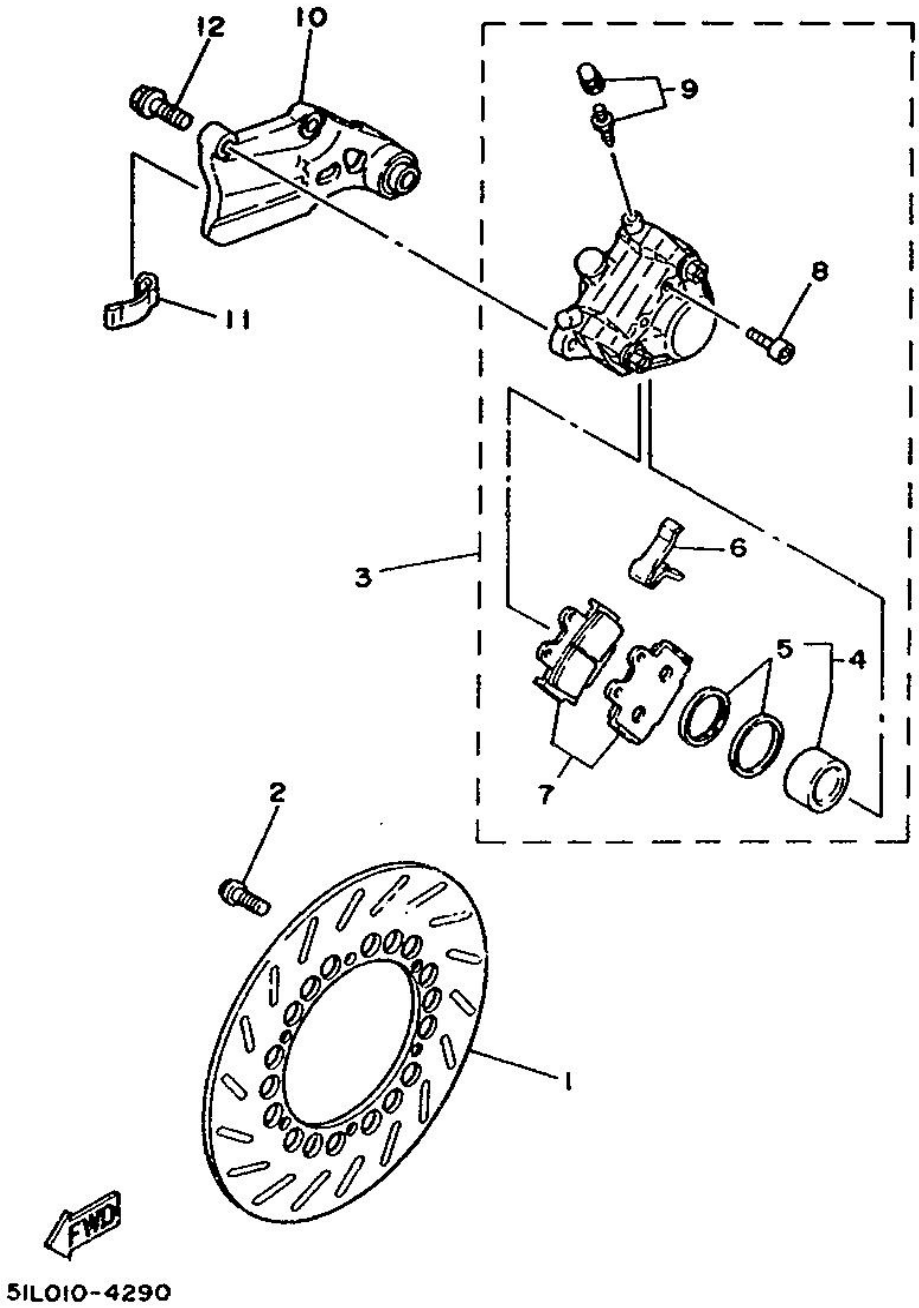

Fig. 29 REAR BRAKE CALIPER

N° référen	Référence de la pièce	Description		Remarques
1	1UA-25831-00-33	DISC, brake (RIGHT)	1	YAMAHA BLACK
2	90149-08230	SCREW	6	
3	51L-25810-51	CALIPER ASSY	1	
4	51L-W0057-00	.PISTON ASSY, caliper	1	
5	51L-W0047-00	..CALIPER SEAL KIT	1	
6	51L-25919-00	.SUPPORT, pad	1	
7	51L-W0046-01	.BRAKE PAD KIT, rear	1	
8	51L-25924-00	.PIN, pad	2	
9	51L-W0048-00	.BREED SCREW KIT	1	
10	51L-25819-00-98	BRACKET, caliper	1	LOW GLOSS BLACK
11	33M-25927-00	SPRING, support	1	
12	90105-10363	BOLT, washer based	2	

Copyright(C) 2009 YAMAHA MOTOR CO. LTD. JAPAN All rights reserved

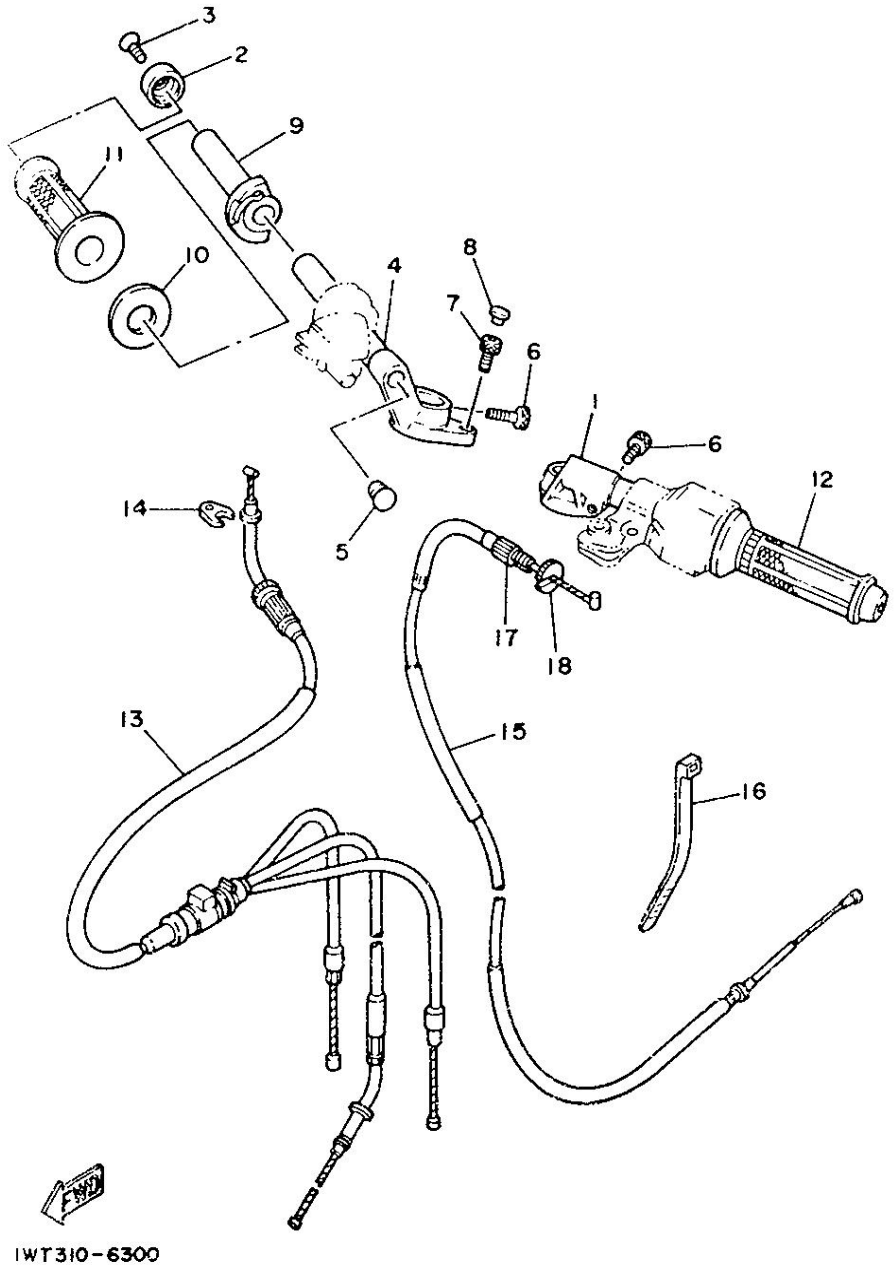

Fig. 30 STEERING HANDLE & CABLE

N° référen	Référence de la pièce	Description		Remarques
1	1JF-26121-00	HANDLEBAR (LEFT)	1	
2	29L-26246-00	END, grip	2	
3	92706-06030	SCREW, flat head	2	
4	1JF-26122-00	HANDLEBAR (RIGHT)	1	
5	90338-19166	PLUG	2	
6	91316-08025	BOLT	2	
7	91316-06016	BOLT	2	
8	2H9-23469-00	CAP, bolt	2	
9	36Y-26243-00	TUBE, throttle guide	1	
10	2H7-26249-00	RING, leaf	1	
11	31A-26242-00	GRIP (R.H)	1	
12	31A-26241-00	GRIP (L.H)	1	
13	1UA-26260-00	CABLE ASSY, throttle & pump	1	
14	5H0-26393-00	HOLDER	1	
15	1UA-26335-00	CABLE, clutch	1	
16	5A8-82591-00	BAND	1	
17	90123-08083	BOLT	1	
18	90179-08316	NUT	1	

Copyright(C) 2009 YAMAHA MOTOR CO. LTD. JAPAN All rights reserved

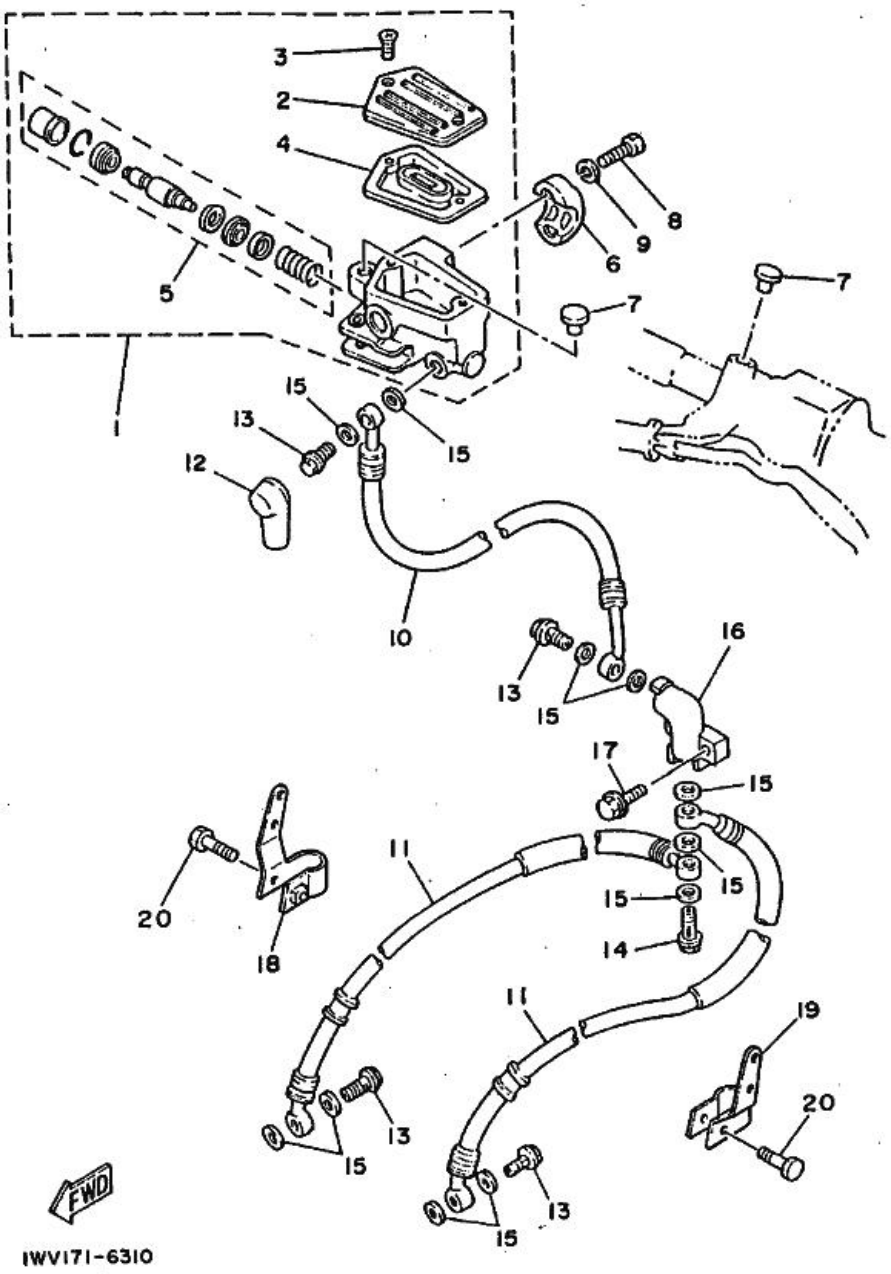

Fig. 31 FRONT MASTER CYLINDER

N° référen	Référence de la pièce	Description		Remarques
1	36Y-25850-00	MASTER CYLINDER ASSY	1	
2	1AE-25852-00	.CAP, reservoir	1	
3	98706-04012	.SCREW, flat head	2	
4	36Y-25854-00	.DIAPHRAGM, reservoir	1	
5	36Y-W0041-00	.CYLINDER KIT, master	1	
6	36Y-25867-00	BRACKET, master cylinder	1	
7	90338-09012	PLUG	2	
8	91316-06025	BOLT	2	
9	92906-06100	WASHER, spring	2	
10	57V-25872-00	HOSE, brake 1	1	
11	51L-25873-00	HOSE, brake 2	2	
12	4L0-25862-00	BOOT, master cylinder	1	
13	90401-10096	BOLT, union	4	
14	90401-10095	BOLT, union	1	
15	90201-10118	WASHER, plate	11	
16	47X-25885-00	JOINT	1	
17	98006-06025	BOLT	1	
18	57V-25875-00	HOLDER, brake hose 1	1	
19	57V-25876-00	HOLDER, brake hose 2	1	
20	97001-06025	BOLT	2	

Copyright(C) 2009 YAMAHA MOTOR CO. LTD. JAPAN All rights reserved

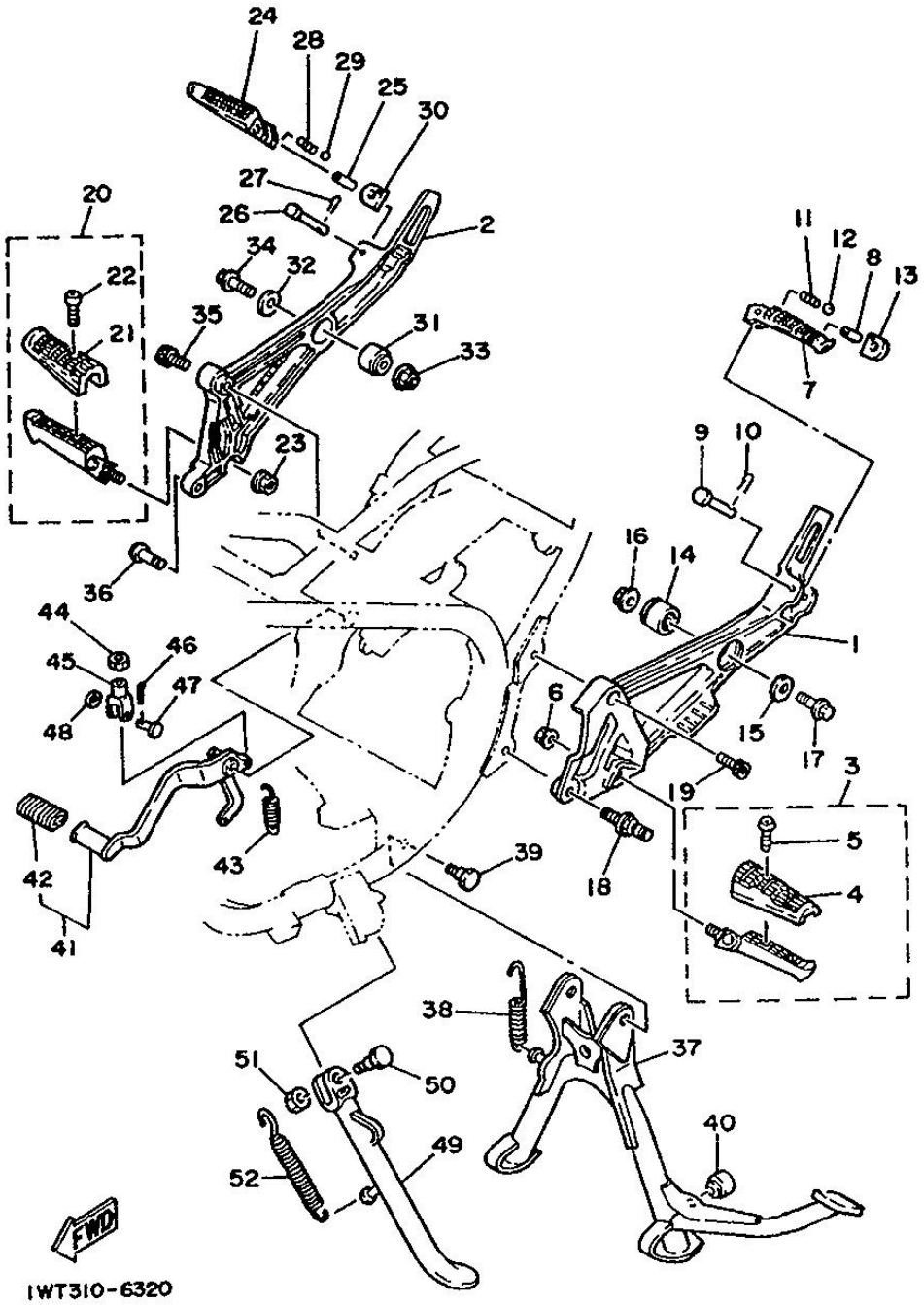

Fig. 32 STAND & FOOTREST

N° référen	Référence de la pièce	Description		Remarques
1	1UA-27442-00	BRACKET 2	1	
2	1UA-27443-00	BRACKET 3	1	
3	1UA-27410-00	FRONT FOOTREST ASSY (LEFT)	1	
4	46X-27413-00	.COVER, footrest	1	
5	90157-05079	.SCREW, pan head	2	
6	90185-10115	NUT, self-locking	1	
7	1HX-27431-00	FOOTREST, rear 1	1	
8	90387-061G0	COLLAR	1	
9	91701-06045	PIN, clevis	1	
10	91401-20015	PIN, cotter	1	
11	90501-12743	SPRING, compression	1	
12	93501-04004	BALL	1	
13	1HX-27437-00	WASHER, special	1	
14	29L-27414-01	DAMPER, footrest	1	
15	90209-08249	WASHER	1	
16	90185-08097	NUT, self-locking	1	
17	90105-08284	BOLT, washer based	1	
18	90109-10754	BOLT	1	
19	91316-10030	BOLT	1	
20	1UA-27420-00	FRONT FOOTREST ASSY (RIGHT)	1	
21	46X-27413-00	.COVER, footrest	1	
22	90157-05079	.SCREW, pan head	2	
23	90185-10115	NUT, self-locking	1	
24	1HX-27441-00	FOOTREST, rear 2	1	
25	90387-061G0	COLLAR	1	
26	91701-06045	PIN, clevis	1	
27	91401-20015	PIN, cotter	1	

Copyright(C) 2009 YAMAHA MOTOR CO. LTD. JAPAN All rights reserved

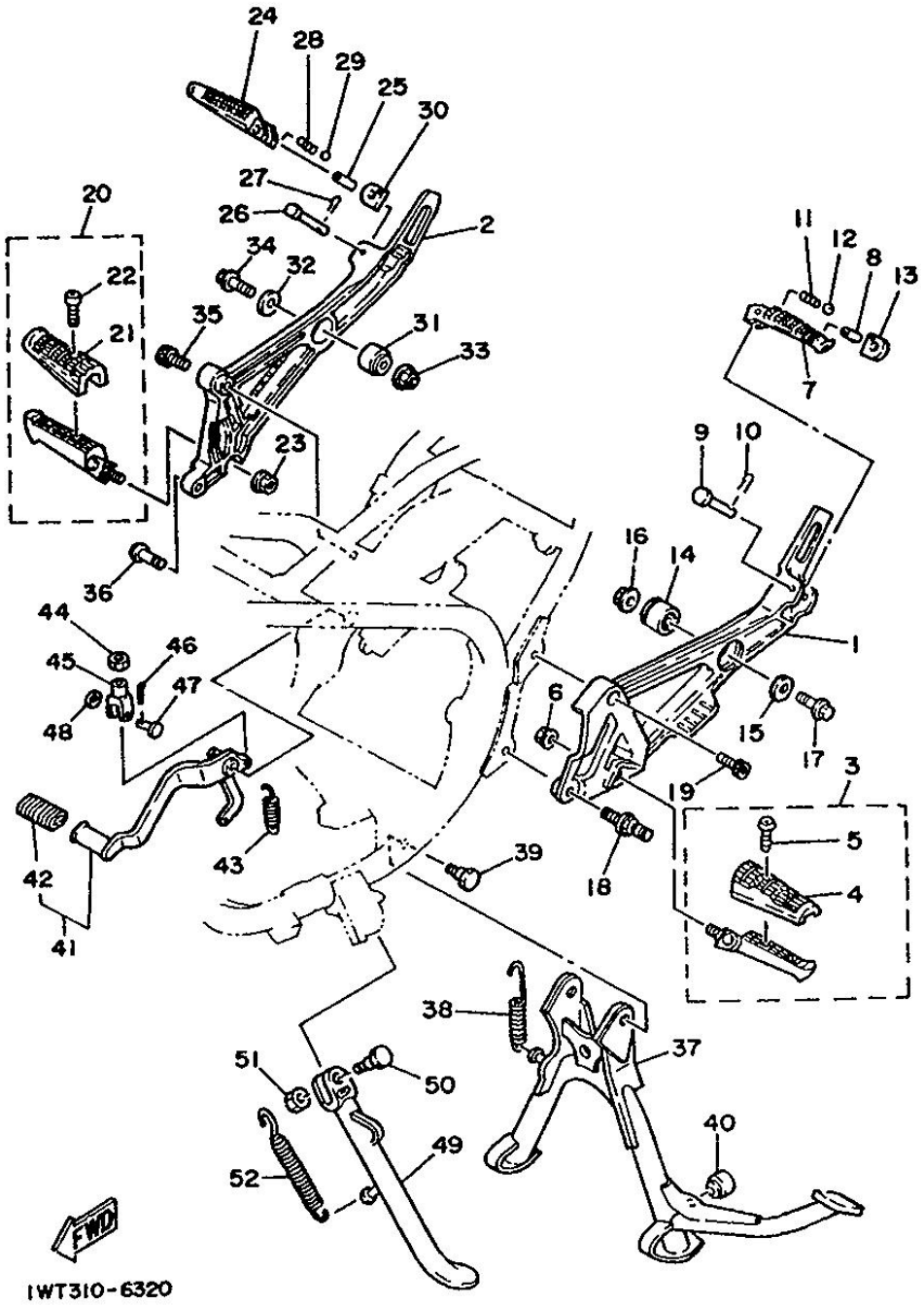

Fig. 32 STAND & FOOTREST

N° référen	Référence de la pièce	Description		Remarques
28	90501-12743	SPRING, compression	1	
29	93501-04004	BALL	1	
30	1HX-27437-00	WASHER, special	1	
31	29L-27414-01	DAMPER, footrest	1	
32	90209-08249	WASHER	1	
33	90185-08097	NUT, self-locking	1	
34	90105-08284	BOLT, washer based	1	
35	91316-10030	BOLT	1	
36	90149-10232	SCREW	1	
37	29L-27111-01-R4	STAND, main	1	BLACK
38	90506-35349	SPRING, tension	1	
39	90109-10737	BOLT	2	
40	109-27114-00	STOPPER, main stand	1	
41	51L-27200-00	PEDAL, brake	1	
42	22N-18113-00	.COVER, shift pedal	1	
43	90506-20192	SPRING, tension	1	
44	95301-08700	NUT	1	
45	1J3-27222-01	JOINT	1	
46	91401-16012	PIN, cotter	1	
47	90240-08013	PIN, clevis	1	
48	90201-08083	WASHER, plate	1	
49	1UA-27311-00-R4	STAND, side	1	BLACK
50	90109-10590	BOLT	1	
51	90185-10037	NUT, self-locking	1	
52	90507-29032	SPRING, tension	1	

Copyright(C) 2009 YAMAHA MOTOR CO. LTD. JAPAN All rights reserved

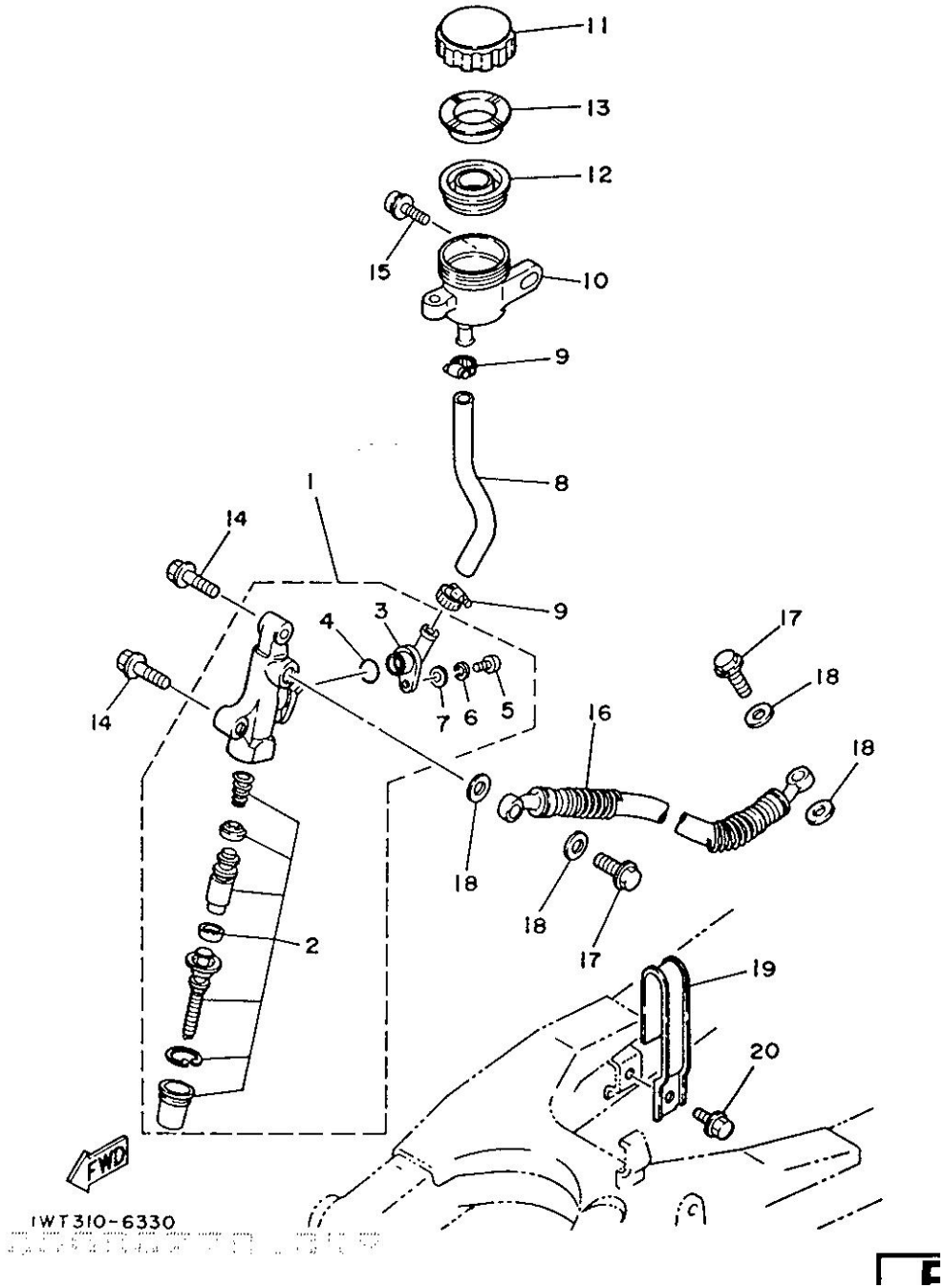

Fig. 33 REAR MASTER CYLINDER

N° référen	Référence de la pièce	Description		Remarques
1	29L-25850-51	MASTER CYLINDER ASSY	1	
2	29L-W0042-50	.CYLINDER KIT, master	1	
3	29L-2582A-50	.JOINT	1	
4	93210-15620	.O-RING	1	
5	98511-04012	.SCREW, pan head	1	
6	92902-04100	.WASHER, spring	1	
7	92901-04600	.WASHER, plate	1	
8	29L-25895-00	HOSE, reservoir	1	
9	90467-14057	CLIP	2	
10	1A1-25894-01	TANK, reservoir	1	
11	1A1-25852-00	CAP, reservoir	1	
12	360-25854-00	DIAPHRAGM, reservoir	1	
13	360-25855-01	BUSH, diaphragm	1	
14	90157-08066	SCREW, pan head	2	
15	90159-06056	SCREW, with washer	1	
16	51L-25872-50	HOSE, brake 1	1	
17	90401-10096	BOLT, union	2	
18	90201-10118	WASHER, plate	4	
19	29L-25875-00	HOLDER, brake hose 1	1	
20	98006-06008	BOLT	1	

Copyright(C) 2009 YAMAHA MOTOR CO. LTD. JAPAN All rights reserved

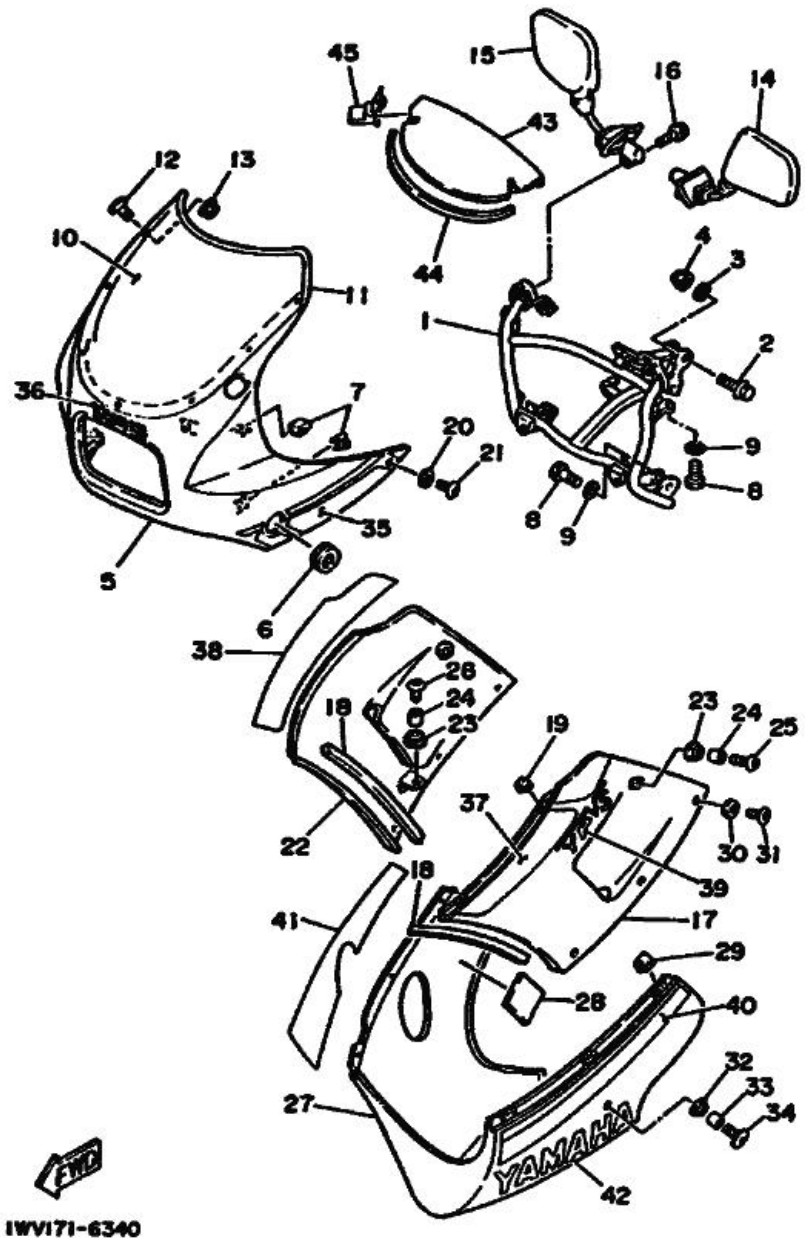

Fig. 34 COWLING 1

N° référen	Référence de la pièce	Description		Remarques
1	51L-28356-03	STAY 1	1	
2	90101-08626	BOLT	2	
3	92906-08600	WASHER, plate	2	
4	95306-08800	NUT	2	
5	47X-2835G-01-AJ	BODY, front upper 1	1	STORMY RED
6	90480-35394	GROMMET	2	
7	47X-21736-00	NUT, plate	6	
8	97326-06016	BOLT	4	
9	92906-06100	WASHER, spring	4	
10	1AG-2837U-00	SCREEN	1	
11	47X-28346-00	MOLE 2	1	
12	90150-05020	SCREW, round head	7	
13	95706-05100	NUT, flange	5	
14	1VU-26280-00	BACK MIRROR ASSY (LEFT)	1	
15	1VU-26290-00	BACK MIRROR ASSY (RIGHT)	1	
16	90105-10330	BOLT, washer based	2	
17	51L-2835U-00-GE	PANEL 1	1	SILKY WHITE
18	51L-28217-00	DAMPER 1	2	
19	90183-05024	NUT, spring	4	
20	90202-06007	WASHER, plate	4	
21	90110-05079	BOLT, hexagon socket head	4	
22	51L-2835V-00-GE	PANEL 2	1	SILKY WHITE
23	90480-13398	GROMMET	4	
24	90387-067K6	COLLAR	4	
25	90110-06078	BOLT, hexagon socket head	2	
26	90110-06090	BOLT, hexagon socket head	2	
27	51L-2835J-00-GE	BODY, front lower 1	1	SILKY WHITE

Copyright(C) 2009 YAMAHA MOTOR CO. LTD. JAPAN All rights reserved

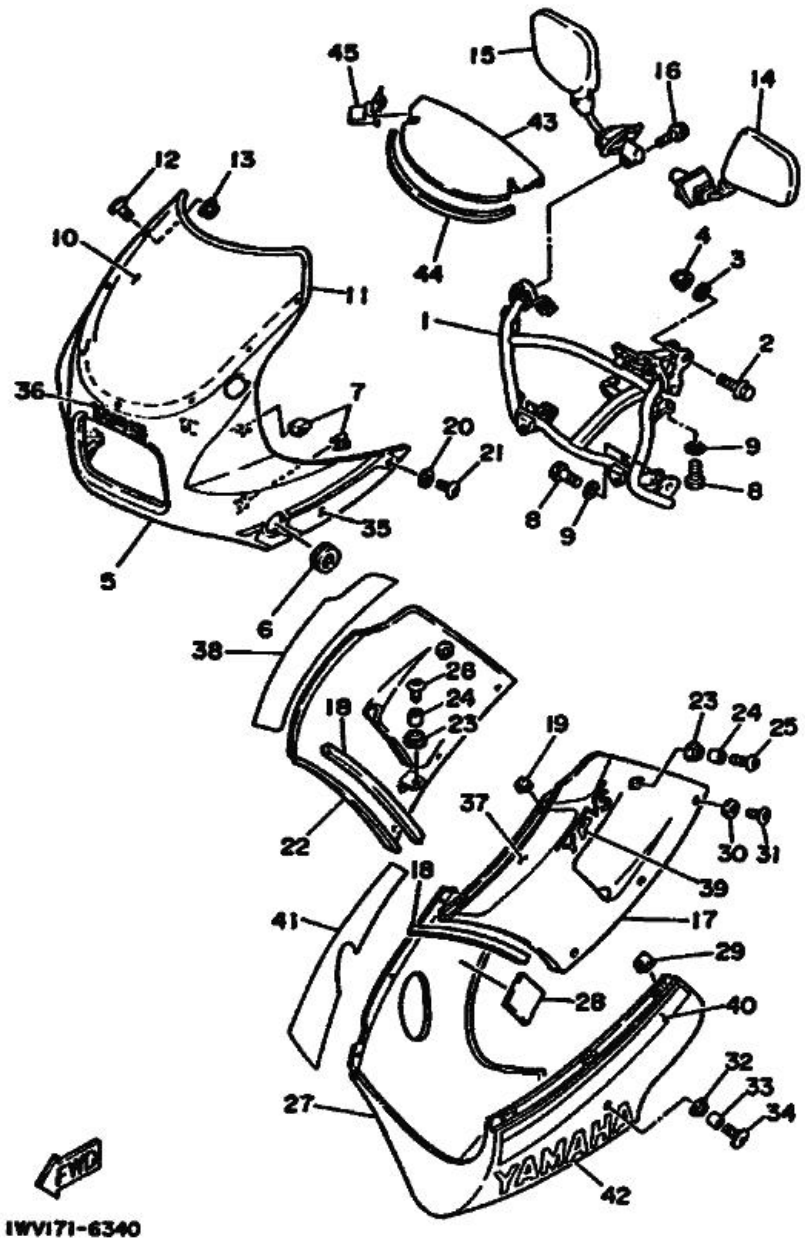

Fig. 34 COWLING 1

N° référen	Référence de la pièce	Description		Remarques
28	51L-28371-00	DAMPER	1	
29	90183-05024	NUT, spring	6	
30	90202-06007	WASHER, plate	6	
31	90110-05079	BOLT, hexagon socket head	6	
32	90480-13398	GROMMET	2	
33	90387-057K6	COLLAR	2	
34	90110-06078	BOLT, hexagon socket head	2	
35	1WT-2834X-00	GRAPHIC SET 1, cowling	1	FOR SW
36	1FM-28338-00	EMBLEM	1	
37	1WT-28398-00	GRAPHIC 5	1	FOR SW
38	1WT-28399-00	GRAPHIC 6	1	FOR SW
39	1WT-28368-00	EMBLEM	2	FOR SW
40	1WT-2839A-00	GRAPHIC 7	1	FOR SW
41	1WT-2839E-00	GRAPHIC 8	1	FOR SW
42	1WT-28315-00	EMBLEM	2	FOR SW
43	51L-2836M-00	PANEL, inner 3	1	
44	51L-28345-00	MOLE 1	1	
45	51L-28344-00	CLIP	2	

Copyright(C) 2009 YAMAHA MOTOR CO. LTD. JAPAN All rights reserved

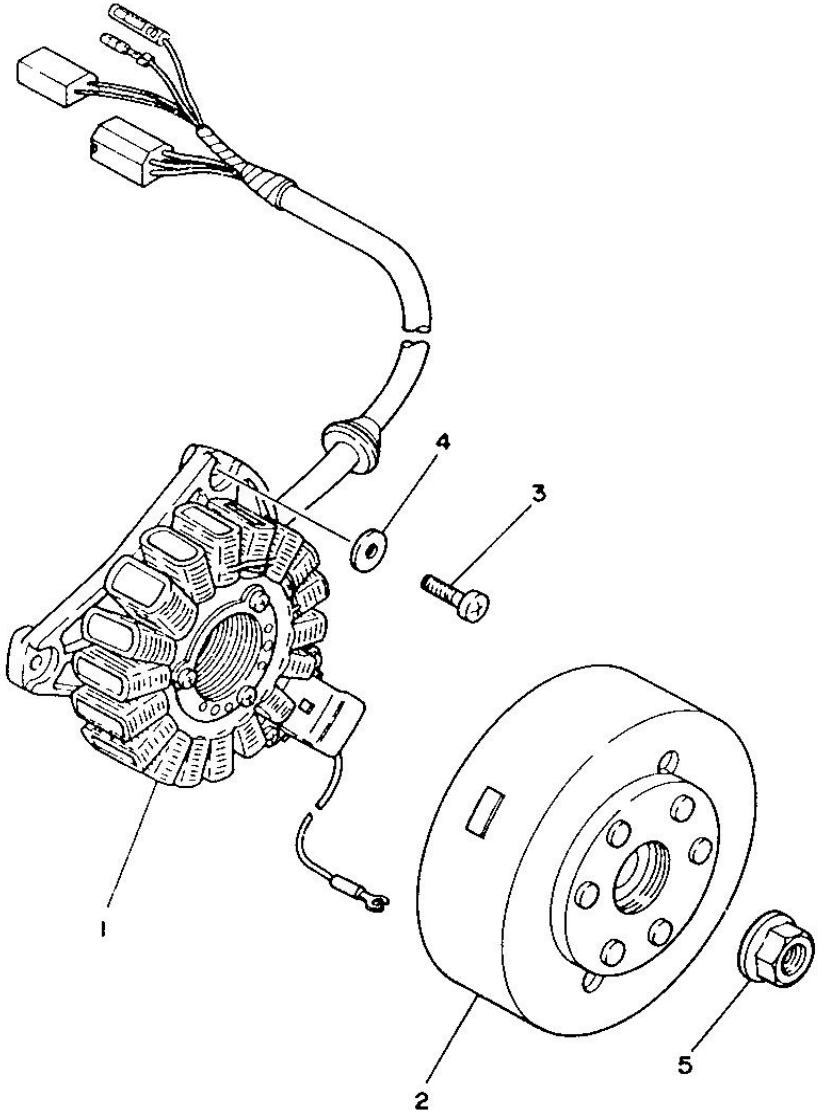

Fig. 35 GENERATOR

N° référen	Référence de la pièce	Description		Remarques
1	1UA-85510-50	STATOR ASSY	1	
2	1UA-85550-50	ROTOR ASSY	1	
3	90153-06007	SCREW, hexagon	3	
4	90201-06042	WASHER, plate	3	
5	90179-12323	NUT	1	

Copyright(C) 2009 YAMAHA MOTOR CO. LTD. JAPAN All rights reserved

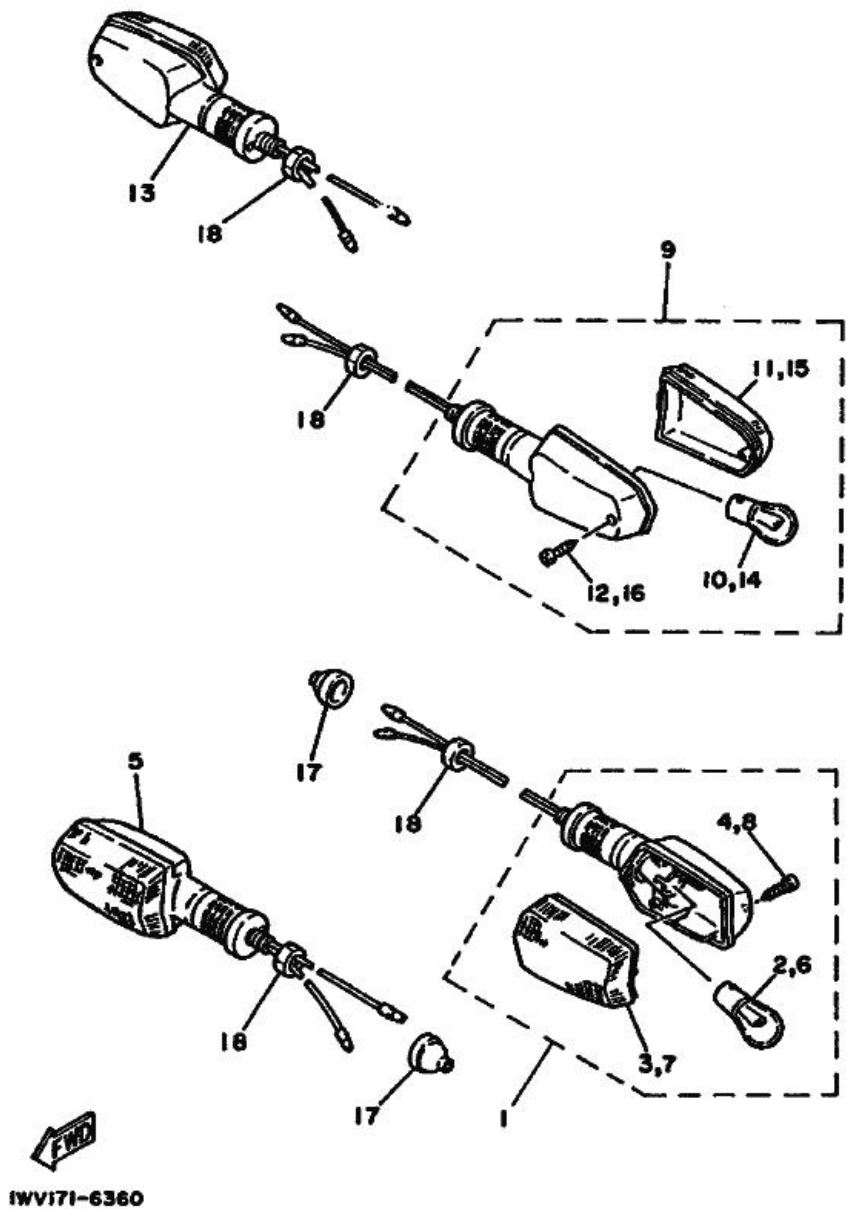

Fig. 36 FLASHER LIGHT

N° référen	Référence de la pièce	Description		Remarques
1	1VW-83310-00	FRONT FLASHER LIGHT ASSY 1	1	
2	256-83311-70	.BULB (12V-27W)	1	
3	1LJ-83332-00	.LENS, flasher	1	
4	97706-40620	.SCREW, tapping	1	
5	1VW-83320-00	FRONT FLASHER LIGHT ASSY 2	1	
6	256-83311-70	.BULB (12V-27W)	1	
7	1LJ-83342-00	.LENS, flasher 2	1	
8	97706-40620	.SCREW, tapping	1	
9	1LJ-83330-00	REAR FLASHER LIGHT ASSY 1	1	
10	256-83311-70	.BULB (12V-27W)	1	
11	1LJ-83342-00	.LENS, flasher 2	1	
12	97706-40620	.SCREW, tapping	1	
13	1LJ-83340-00	REAR FLASHER LIGHT ASSY 2	1	
14	256-83311-70	.BULB (12V-27W)	1	
15	1LJ-83332-00	.LENS, flasher	1	
16	97706-40620	.SCREW, tapping	1	
17	10V-83365-00	CAP	2	
18	95316-12700	NUT	4	

Copyright(C) 2009 YAMAHA MOTOR CO. LTD. JAPAN All rights reserved

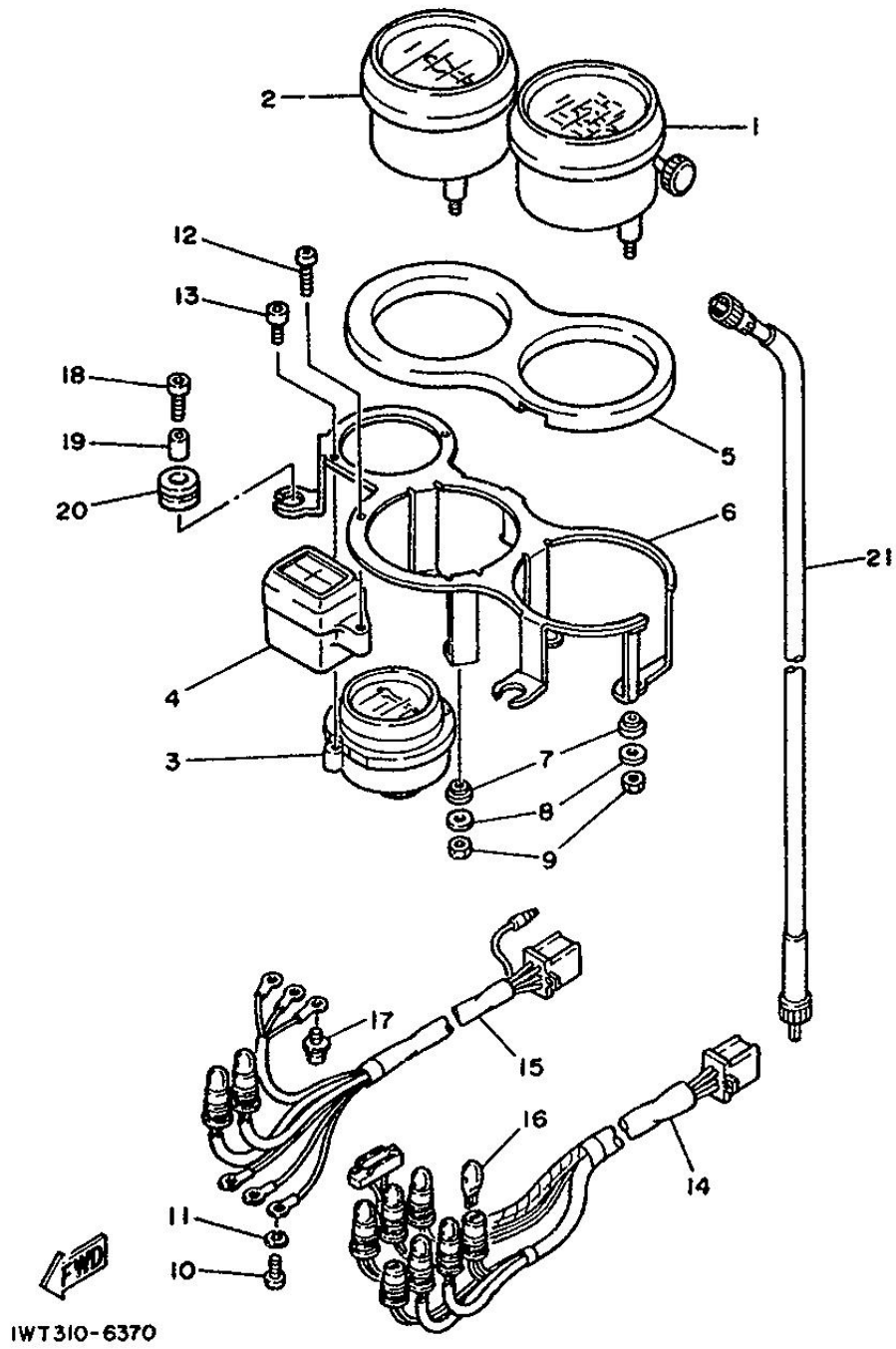

Fig. 37 METER

N° référen	Référence de la pièce	Description		Remarques
1	57V-83570-F0	SPEEDOMETER ASSY	1	
2	47X-83540-00	TACHOMETER ASSY	1	
3	47X-83590-00	WATER TEMPERATURE ASSY	1	
4	47X-83530-00	PILOT LIGHT ASSY	1	
5	47X-83513-00	DAMPER	1	
6	47X-83519-00	BRACKET, meter	1	
7	584-83523-00	DAMPER	4	
8	90201-052E2	WASHER, plate	4	
9	95306-05600	NUT	4	
10	98501-03012	SCREW, pan head	3	
11	92990-03100	WASHER, spring	3	
12	47X-83616-00	SCREW, tapping	1	
13	91316-03016	BOLT	2	
14	47X-83509-00	SOCKET CORD ASSY	1	
15	47X-83520-00	SOCKET CORD ASSY	1	
16	4G1-84744-00	BULB (12V-3.4W)	8	
17	90159-03102	SCREW, with washer	3	
18	90110-06087	BOLT, hexagon socket head	3	
19	90387-065L7	COLLAR	3	
20	90480-14229	GROMMET	3	
21	51L-83550-00	SPEEDOMETER CABLE ASSY	1	

Copyright(C) 2009 YAMAHA MOTOR CO. LTD. JAPAN All rights reserved

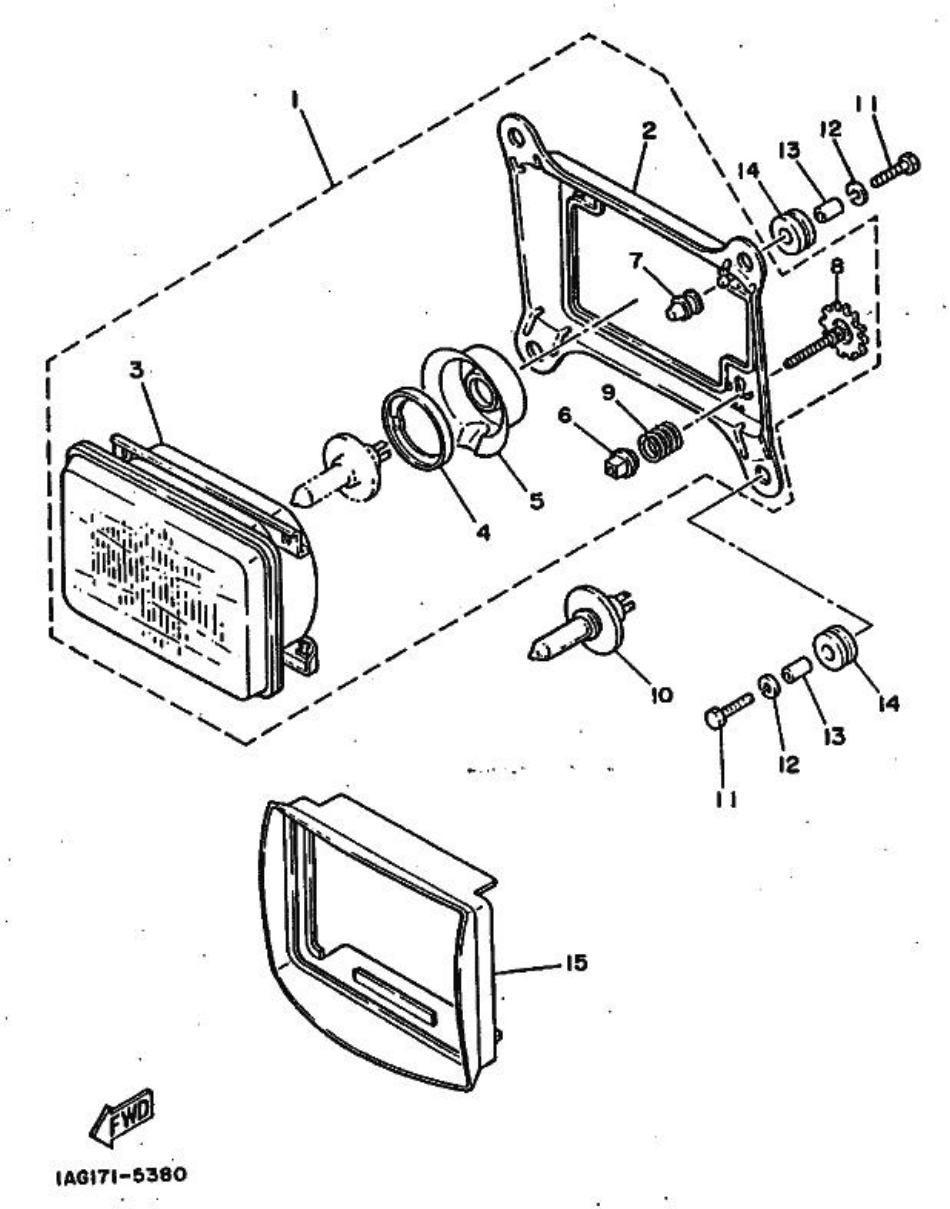

Fig. 38 HEADLIGHT

N° référen	Référence de la pièce	Description		Remarques
1	1AG-84303-A0	HEADLIGHT UNIT ASSY	1	
2	51L-84311-00	.BODY, headlight	1	
3	52X-84320-A0	.LENS ASSY	1	
4	2F9-84375-00	.FITTING PLATE, bulb	1	
5	2F9-84397-01	.COVER, socket	1	
6	51L-84334-00	.NUT, adjusting	2	
7	51L-8431U-00	.HOLDER	1	
8	47X-84337-00	.BOLT, special	2	
9	51L-84332-00	.SPRING, screw	2	
10	*	BULB (12V-60/55W)	1	LM YMC-00903-00
11	97306-06025	BOLT	4	
12	92906-06100	WASHER, spring	4	
13	90387-07391	COLLAR	4	
14	90480-14229	GROMMET	4	
15	51L-84196-01	COVER, socket	1	

Copyright(C) 2009 YAMAHA MOTOR CO. LTD. JAPAN All rights reserved

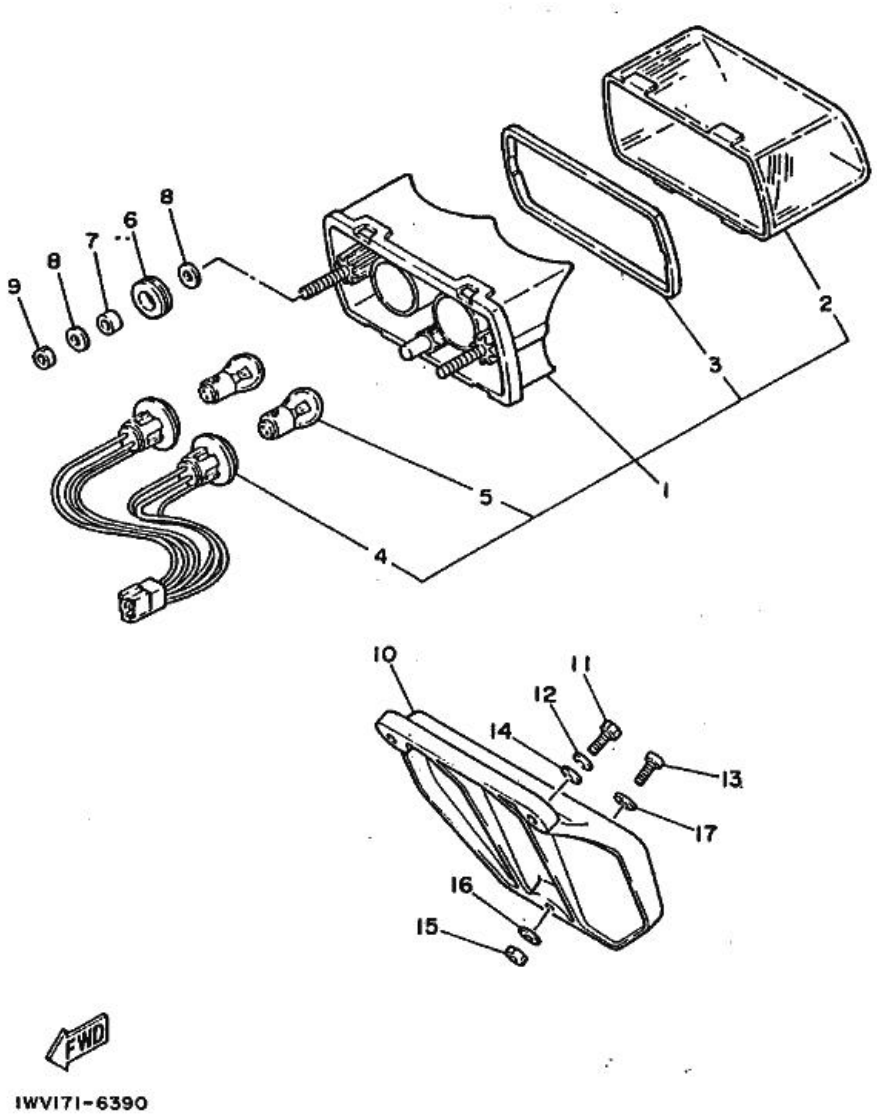

Fig. 39 TAILLIGHT

N° référen	Référence de la pièce	Description		Remarques
1	52X-84710-60	TAILLIGHT UNIT ASSY	1	
2	47X-84721-00	.LENS, taillight	1	
3	47X-84723-00	.GASKET, tail lens	1	
4	47X-84735-00	.CORD ASSY	1	
5	256-84714-61	.BULB (12V-27/8W)	2	
6	90480-18276	GROMMET	2	
7	90387-06694	COLLAR	2	
8	90201-063J2	WASHER, plate	4	
9	95302-06600	NUT	2	
10	33E-84751-00	BRACKET, licence	1	
11	97306-06020	BOLT	2	
12	92906-06100	WASHER, spring	2	
13	92506-06020	SCREW, pan head	1	
14	90201-06059	WASHER, plate	2	
15	95302-06600	NUT	1	
16	90201-06052	WASHER, plate	1	
17	90201-062A8	WASHER, plate	1	

Copyright(C) 2009 YAMAHA MOTOR CO. LTD. JAPAN All rights reserved

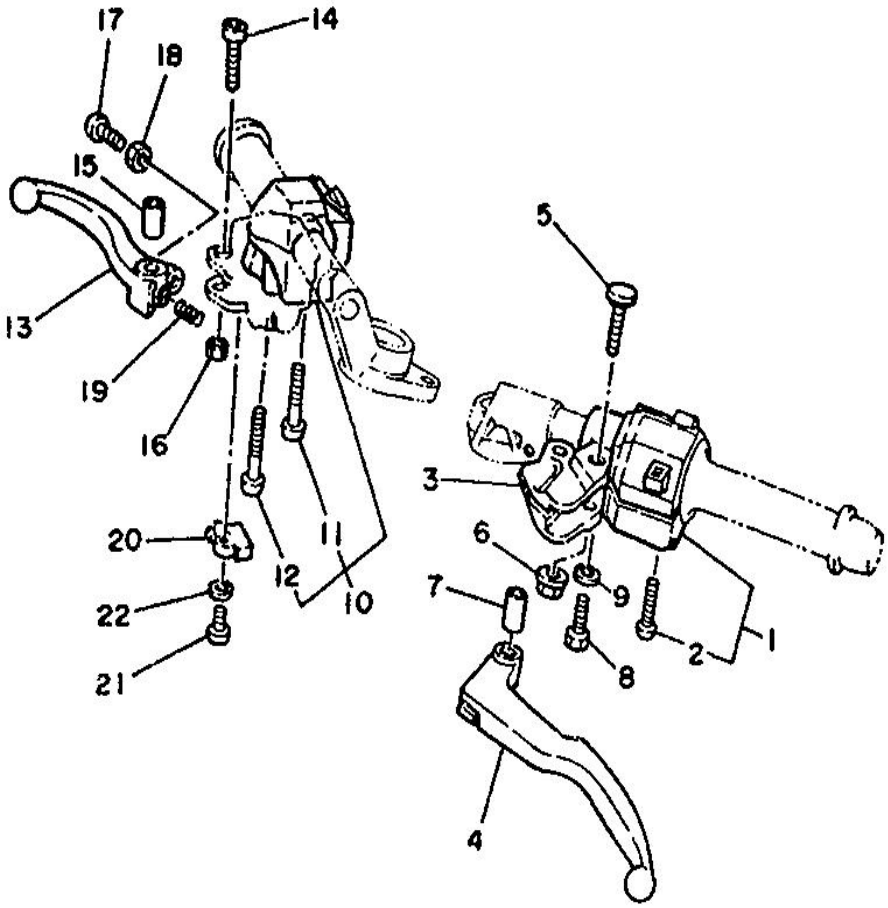

IWT310-6400

Fig. 40 HANDLE SWITCH & LEVER

N° référen	Référence de la pièce	Description		Remarques
1	52X-83973-00	SWITCH, handle 3	1	
2	98506-05035	.SCREW, pan head	2	
3	29L-82911-01	HOLDER, lever 1	1	
4	29L-83912-01	LEVER 1	1	
5	31A-83945-00	BOLT, lever	1	
6	95706-06100	NUT, flange	1	
7	31A-83913-00	COLLAR, lever 1	1	
8	97306-06025	BOLT	1	
9	92906-06100	WASHER, spring	1	
10	1WV-83976-00	SWITCH, handle 1	1	
11	98506-05040	.SCREW, pan head	1	
12	98506-05045	.SCREW, pan head	1	
13	36Y-83922-00	LEVER 2	1	
14	90110-06074	BOLT, hexagon socket head	1	
15	36Y-83913-00	COLLAR, lever 1	1	
16	95606-06100	NUT, u	1	
17	90149-06153	SCREW	1	
18	90170-06010	NUT	1	
19	90501-10312	SPRING, compression	1	
20	36Y-83980-00	FRONT STOP SWITCH ASSY	1	
21	98506-04018	SCREW, pan head	1	
22	92906-04600	WASHER, plate	1	

Copyright(C) 2009 YAMAHA MOTOR CO. LTD. JAPAN All rights reserved

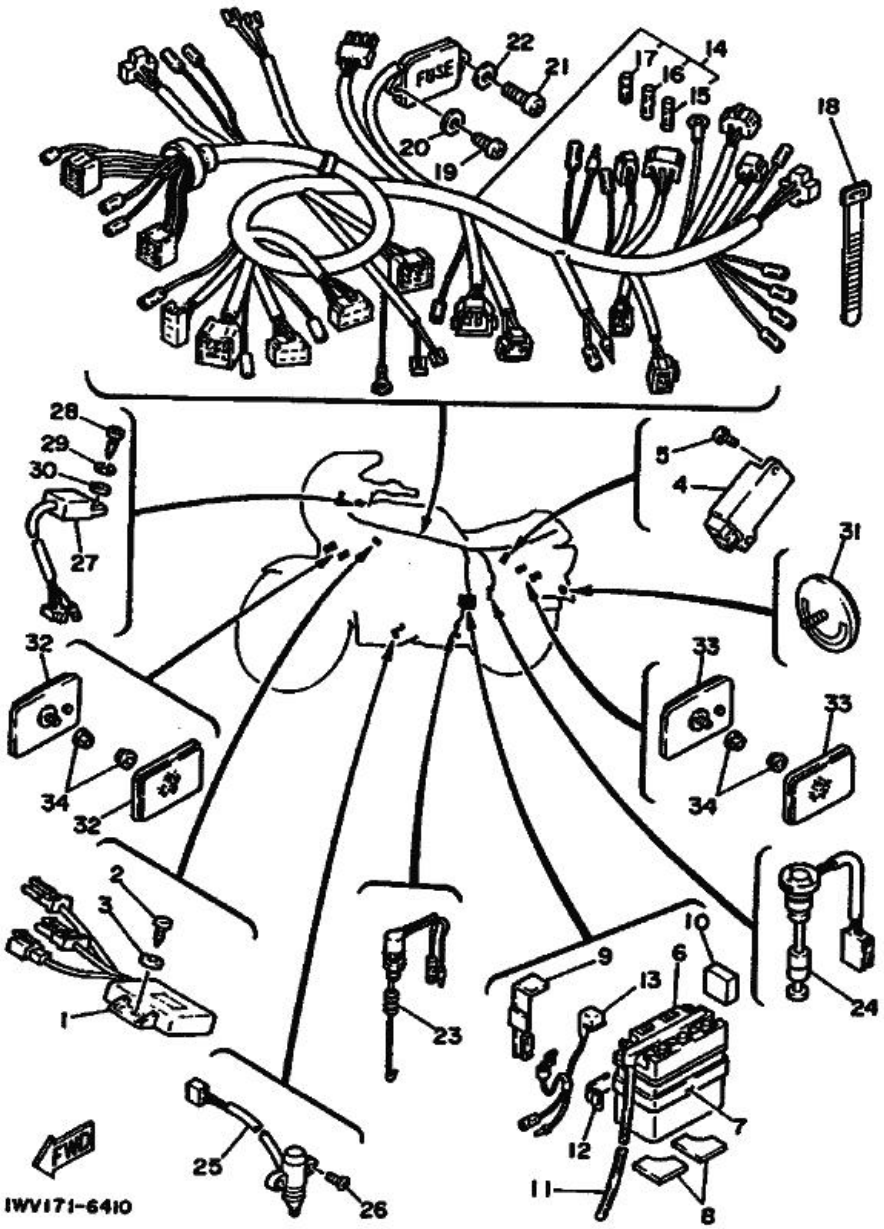

Fig. 41 ELECTRICAL 1

N° référen	Référence de la pièce	Description		Remarques
1	1UA-85540-50	C.D.I. UNIT ASSY	1	
2	97702-60520	SCREW, tapping	2	
3	92990-06200	WASHER, plain	2	
4	47X-81960-A0	RECTIFIER & REGULATOR ASSY	1	
5	92501-06012	SCREW, pan head	2	
6	43F-82110-60	BATTERY ASSY (GM4A-38)	1	
7	1UA-82124-00	BAND, battery	1	
8	1UA-82122-00	SEAT, battery	2	
9	29L-82129-00	COVER, battery	1	
10	1UA-82123-00	SEAT, battery	1	
11	90445-08336	HOSE	1	
12	29L-82131-00	BAND, battery	1	
13	4L0-82117-00	WIRE, lead	1	
14	1WV-82590-00	WIRE HARNESS ASSY	1	
15	1A0-82161-00	.FUSE (20A)	1	
16	4X7-82151-00	.FUSE (15A)	2	
17	5G2-82151-00	.FUSE (5A)	1	
18	437-83936-10	BAND, switch cord	1	
19	97780-60116	SCREW, tapping	1	
20	92901-06200	WASHER, plain	1	
21	92501-06014	SCREW, pan head	1	
22	92901-06600	WASHER, plate	1	
23	1T2-82530-00	STOP SWITCH ASSY	1	
24	34X-85720-00	OIL LEVEL GAUGE ASSY	1	
25	33E-82566-00	SWITCH, side stand	1	
26	98706-05016	SCREW, flat head	2	
27	4Y3-85590-M0	CONTROL UNIT ASSY	1	

Copyright(C) 2009 YAMAHA MOTOR CO. LTD. JAPAN All rights reserved

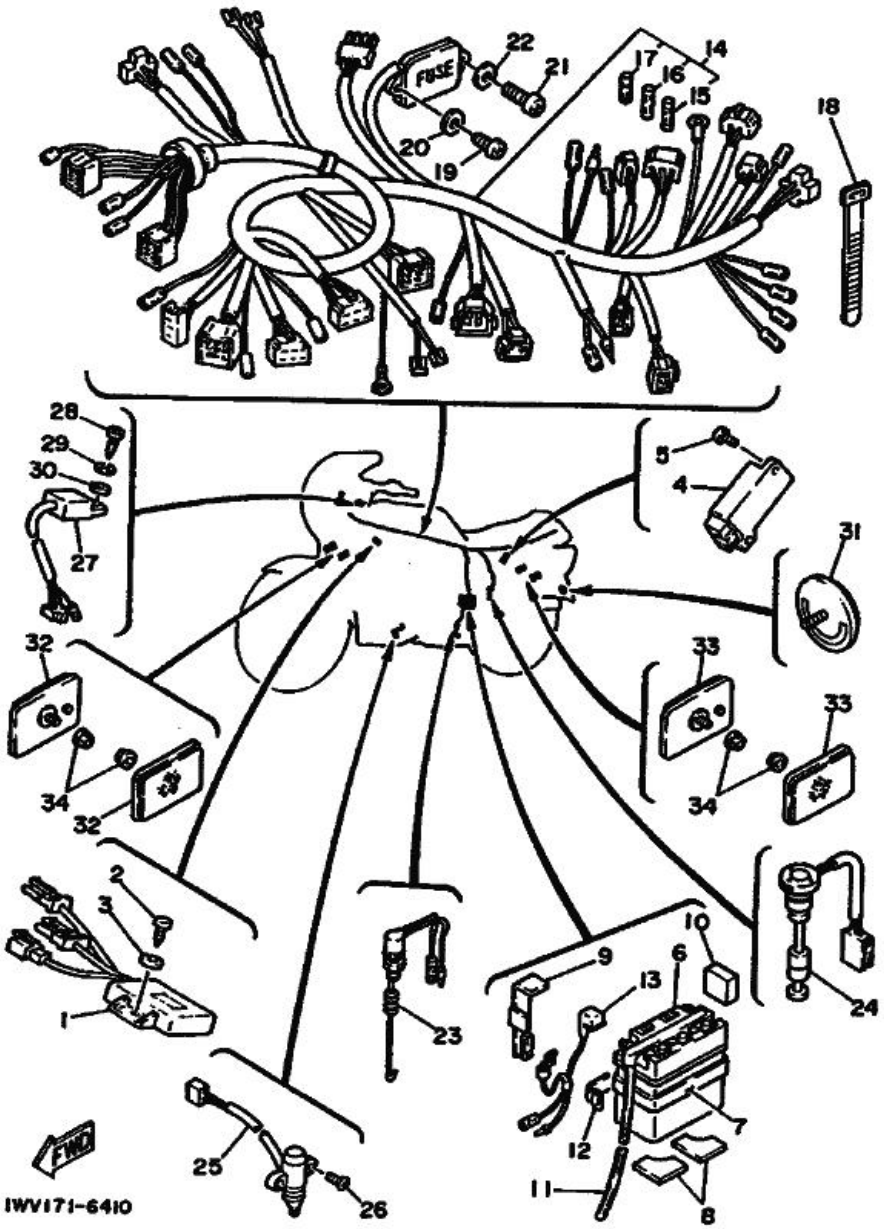

Fig. 41 ELECTRICAL 1

N° référen	Référence de la pièce	Description		Remarques
28	97702-60520	SCREW, tapping	1	
29	92990-06100	WASHER, spring	1	
30	92990-06600	WASHER, plate	1	
31	449-85131-02	REFLECTOR, rear 1	1	
32	20G-85110-00	FRONT REFLECTOR ASSY	2	
33	3G1-85130-01	REAR REFLECTOR ASSY	2	
34	95702-05500	NUT, flange	4	

Copyright(C) 2009 YAMAHA MOTOR CO. LTD. JAPAN All rights reserved

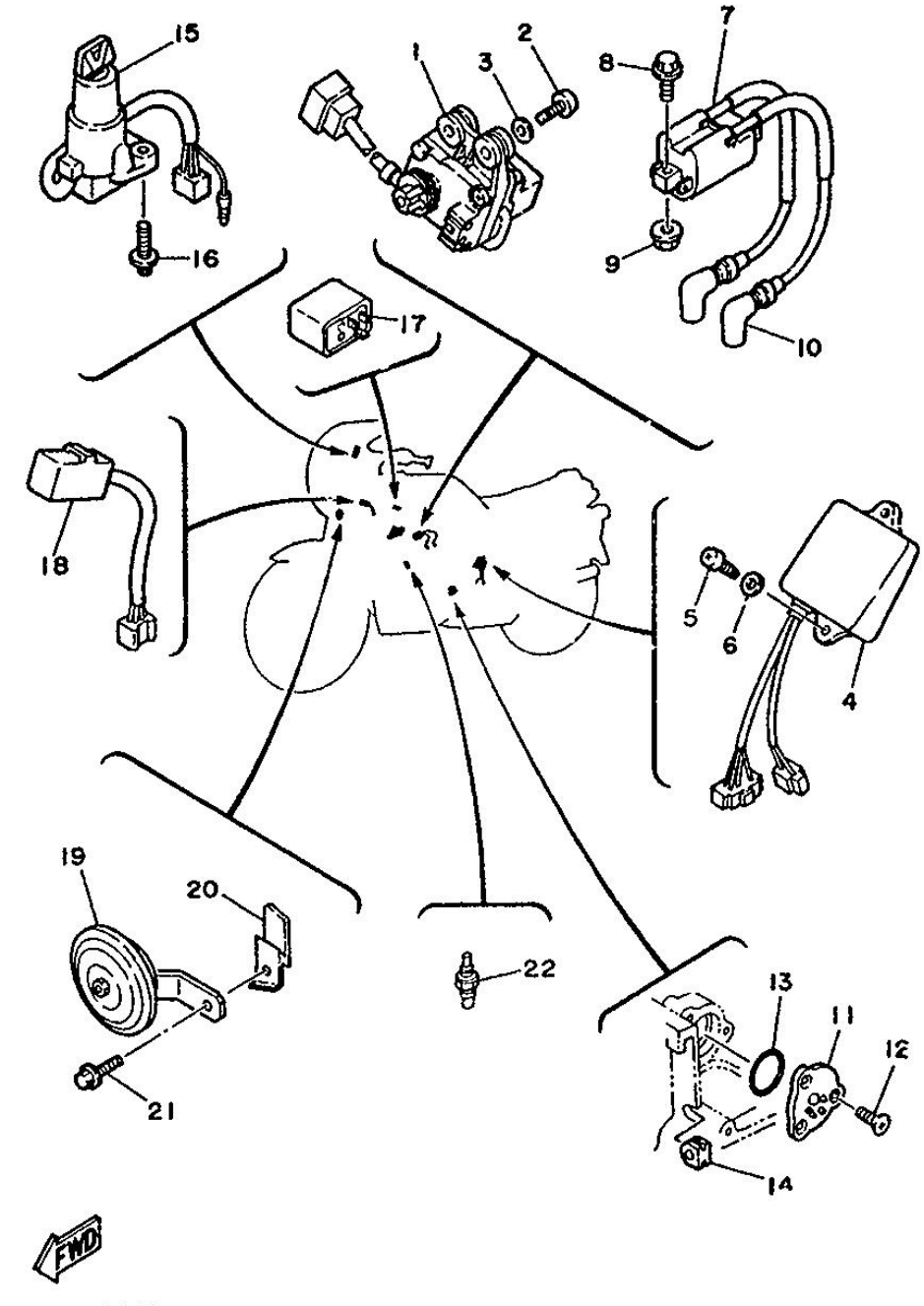

Fig. 42 ELECTRICAL 2

N° référen	Référence de la pièce	Description		Remarques
1	1UA-85820-00	SERVO MOTOR ASSY	1	
2	92501-06025	SCREW, pan head	2	
3	90201-06067	WASHER, plate	2	
4	1UA-85830-00	CONTROL UNIT ASSY	1	
5	97702-60116	SCREW, tapping	2	
6	92990-06200	WASHER, plain	2	
7	1UA-82310-50	IGNITION COIL ASSY	1	
8	98002-06018	BOLT	2	
9	95702-06500	NUT, flange	1	
10	1M1-82370-21	PLUG CAP ASSY	2	WITH NOISE SUPPRESSOR
11	1L9-82540-00	NEUTRAL SWITCH ASSY	1	
12	98702-05012	SCREW, flat head	3	
13	93210-29147	O-RING	1	
14	90480-01148	GROMMET	1	
15	1UA-82501-00	MAIN SWITCH STEERING LOCK	1	
16	90109-06614	BOLT	2	
17	4H7-83350-70	FLASHER RELAY ASSY	1	
18	1A0-83395-03	FLASHER CANCELLING UNIT	1	
19	1WT-83371-00	HORN	1	
20	51L-83378-00	STAY, horn	1	
21	98006-08010	BOLT	1	
22	11H-83591-00	THERMO UNIT	1	

Copyright(C) 2009 YAMAHA MOTOR CO. LTD. JAPAN All rights reserved